INSTALLATION, OPERATION, MAINTENANCE
Translation of original instructions

Opera Touch ES-2ES-Plus

EN English

Doc. No. H5205EN00
Edition 1 04 - 2017

EVOCA S.p.A.
ad unico socio
Sede amministrativa e operativa: Via Roma 24
24030 Valbrembo (BG) Italia
Tel +39 035 606111
Fax +39 035 606463
www.evocagroup.com
Sede legale: Via Tommaso Grossi 2
20121 Milano (MI) Italia
Cap. Soc. € 41.138.297,00 i.v.
Reg. Impr. MI, Cod. Fisc. e P.IVA: 05035600963
Reg. Produttori A.E.E.: IT08020000001054
Cod. identificativo: IT 05035600963

CE

DICHIARAZIONE DI CONFORMITA' - DECLARATION OF CONFORMITY - DÉCLARATION DE CONFORMITÉ - KONFORMITÄTSERKLÄRUNG - DECLARACIÓN DE CONFORMIDAD - DECLARAÇÃO DE CONFORMIDADE - VERKLARING VAN OVEREENSTEMMING - OVERENSSTEMMELSESERKLÆRING - FÖRSÄKRAN OM ÖVERENSSTÄMMELSE - VAATIMUSTENMUKAISUUSVAKUUTUS - ERKLÆRING OM OVERENSSTEMMELSE - PROHLÁŠENÍ O SHODĚ - DEKLARACJA ZGODNOŚCI - ДЕКЛАРАЦИЯ СООТВЕТСТВИЯ -

IT La presente dichiarazione di conformità è rilasciata sotto l'esclusiva responsabilità del fabbricante. Si dichiara che l'apparecchiatura, descritta nella targhetta di identificazione, è conforme alle disposizioni legislative delle Direttive Europee e successive modifiche ed integrazioni.
Vengono riportate le norme armonizzate o le specifiche tecniche (designazioni) che sono state applicate in accordo con le regole della buona arte in materia di sicurezza in vigore nella UE.

EN This declaration of conformity is issued under the manufacturer's sole responsibility. It is declared that the equipment described by the identification plate is in compliance with the legal provisions of the European Directives as well as its subsequent amendments and supplements.
The harmonised standards or the technical specifications (designations) applied in compliance with the safety rules of good practice in force in the EU are stated herein.

FR La présente déclaration de conformité est délivrée sous la responsabilité exclusive du fabricant. On déclare que l'appareillage décrit sur la plaquette d'identification est conforme aux dispositions législatives des Directives européennes et leurs modifications et intégrations ultérieures. Sont indiquées les normes harmonisées ou les spécifications techniques (désignations) qui ont été appliquées conformément aux bonnes règles de l'art en matière de sécurité en vigueur dans l'UE.

ES La presente declaración de conformidad se entrega bajo la exclusiva responsabilidad del fabricante. Se declara que el aparato, descripto en la etiqueta de identificación, es conforme con las disposiciones legislativas de las Directivas Europeas y con sus sucesivas modificaciones e integraciones.
Se indican las normas armonizadas o las especificaciones técnicas (designaciones) que han sido aplicadas de acuerdo con las reglas del buen arte en materia de seguridad en vigencia en la UE.

DE Diese Konformitätserklärung wurde unter ausschließlicher Verantwortung des Herstellers verfasst. Es wird erklärt, dass das auf dem Typenschild beschriebene Gerät den gesetzlichen Bestimmungen der Europäischen Richtlinien und anschließenden Änderungen und Ergänzungen entspricht. Es werden die harmonisierten technischen Spezifikationen (Bestimmungen) aufgeführt, die gemäß den Regeln der Kunst hinsichtlich den in der EU geltenden Sicherheitsnormen angewendet wurden.

PT A presente declaração de conformidade é emitida sob exclusiva responsabilidade do fabricante. Declara-se que o equipamento, descrito na placa de identificação, está em conformidade com as disposições legislativas das Diretivas Europeias e sucessivas modificações e integrações. São indicadas as normas harmonizadas ou as especificações técnicas (designações) que foram aplicadas de acordo com as regras de boa engenharia em matéria de segurança, em vigor na UE.

NL Deze verklaring van overeenstemming wordt uitsluitend onder de verantwoordelijkheid van de fabrikant verstrekt. Men verklaart dat het apparaat, beschreven op het identificatieplaatje, overeenstemt met de wettelijke bepalingen van de Europese Richtlijnen en daaropvolgende wijzigingen en aanvullingen.Hierna worden de geharmoniseerde normen of de technische specificaties (aanwijzingen) aangegeven die toegepast werden in overeenstemming met de regels van de goede techniek op gebied van veiligheid, die in de EU van kracht zijn.

DA Denne overensstemmelseserklæring udstedes ene og alene på fabrikantens ansvar. Det erklæres hermed, at apparaturet, der er beskrevet på udstyrets typeskilt, opfylder de lovgivningsmæssige i krav i de europæiske direktiver samt senere ændringer og tilføjelser. De anvendte harmoniserede standarder eller tekniske specifikationer (betegnelser), som er anvendt i overensstemmelse med reglerne i de tekniske sikkerhedsforskrifter gældende i EU.

SV Denna försäkran om överensstämmelse utfärdas av tillverkaren på dennes egna ansvar. Vi försäkrar att utrustningen, som beskrivs på märkskylten, överensstämmer med lagar och författningar i EU-direktiven och i ändrad och kompletterad lydelse. Harmoniserade standarder eller tekniska specifikationer (beteckningar) återges som har tillämpats enligt sunda tekniska principer i fråga om säkerheten som gäller inom EU och som anges i listan på samma sida.

FI Tämä vaatimustenmukaisuusvakuutus annetaan valmistajan yksinomaisen vastuun alla. Vakuutamme, että arvokilvessä kuvattu laite vastaa neuvoston direktiivejä sekä niihin liittyviä muutoksia ja täydennyksiä. Lisäksi annetaan yhdenmukaistetut standardit tai tekniset erittelyt (käyttötarkoitukset), joita on sovellettu EU-maissa, voimassa olevien turvallisuutta koskevien valmistukseen liittyvien määräysten ohella.

NO Denne samsvarserklæringen er utferdiget under eneansvar av produsenten. Det erklæres at apparatet, beskrevet på typeskiltet, er i samsvar med gjeldende europeiske direktiver og senere endringer og tillegg. Harmoniserte standarder eller tekniske spesifikasjoner (betegnelser) anvendt i samsvar med EUs gjeldende sikkerhetsregler er angitt.

RU Настоящая декларация соответствия выдается только под эксклюзивной ответственностью изготовителя. Свидетельствуется, что оборудование, описанное в идентификационной табличке, соответствует законодательным положениям Европейских Директив, а также последующим изменениям и дополнениям. Приводятся гармонизированные нормы или технические спецификации (указания), которые были применены в соответствии с правилами качественного выполнения работ в отношении безопасности, действующими в ЕС.

Direttive europee **European directives**	**Sostituita da** **Repealed by**		**Norme armonizzate / Specifiche tecniche** **Harmonised standards / Technical specifications**	
2006/95/CE	2014/35/EU	(LVD)	EN 60335-1:2012 + A11:2014 EN 60335-2-75:2004 + A1:2005 + A11:2006 + A2:2008 + A12:2010	EN 62233:2008
2006/42/EC		(MD)	EN60335-1:2012+A11:2014	
97/23/EC	2014/68/UE	(PED)	EN60335-1:2012+A11:2014	
2004/108/EC	2014/30/EU	(EMC)	EN 55014-1:2006+A1:2009+A2:2011 EN 55014-2:2015 EN 61000-3-2:2014	EN 61000-3-3:2013 EN 61000-3-11:2001
2002/72/CE+2008/39/CE				
EC 1935/2004			EN16889:2016	EDQM Practical Guide CM/RES (2013)9
EC10/2011	EC10/2011+UE2016/1416			
EC 2023/2006		(GMP)		
2002/95/EC	2011/65/UE	(RoHS)	EN 50581:2012	
2002/96/CE	2012/19/UE	(WEEE)		
2014/53/EU *		(RED)	EN62311:2008 EN60335-1:2012+A11:2014 EN60335-2-75:2004+A1:2005+A11:2006 +A2:2008+A12:2010	ETSI EN 301 489-1 V1.9.2:2011 ETSI EN 301 489-17 V2.2.1:2012 ETSI EN 301 328 V2.1.1:2016

*Solo con moduli radio di Evoca S.p.A. / Only with radio modules of Evoca S.p.A.

Il fascicolo tecnico è costituito e disponibile presso:
The technical file is compiled and available at:

Evoca S.p.A.

ANDREA ZOCCHI
C.E.O

Ed. 11 17

Declaration of conformity

The declaration of conformity is issued under the manufacturer's sole responsibility.
The declaration of conformity with the European Directives and Standards provided for by the laws in force is supplied by the first page of this manual, which is an integral part of the machine.

- The legal provisions of the European Directives in force (with the subsequent amendments and integrations thereof)
- The harmonised standards in force
- The technical specifications (designations) applied in compliance with the safety rules of good practice enforced in the EU and listed on the same page.

INTEGRATION OF RADIO MODULES

In compliance with Article 17 of Directive 2014/53/EU (RED), the manufacturer checks whether the radio equipment is in compliance with the essential requirements of article 3 of the Directive.
The procedure used to check compliance is at the manufacturer's discretion.
If a radio module is built in a "non-radio" equipment, the subject integrating the module will become the manufacturer of the end product and it must therefore check the compliance of the end product with the essential requirements of the 2014/53/EU (RED) Directive.
As a matter of fact, the integration of radio modules in other products can influence the compliance of the end product with the essential requirements of the Directive.

DEFINITIONS ACCORDING TO THE LAW

The **manufacturer** is a natural person who or a public body which manufactures radio equipment and/or electric material or has it engineered, manufactured or marketed by putting its own trademark or name on it.
An **importer** or **distributor** who places radio equipment or electric material on the market by putting its own name or trademark becomes the manufacturer.
An **importer** or **distributor** who makes any change to radio equipment or electric material already placed on the market to such an extent that the said change may condition the compliance with the listed directives is held to be the manufacturer and it must therefore assume the relative obligations according to the said directives.

Symbology

The following symbols may be present inside the machines, according to models (signs of danger)

	Attention: dangerous voltage Power off before removing the cover
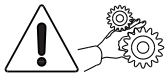	Attention Danger of crushing your hands
	Attention Hot surface

The signs of danger must be readable and visible; they shall be neither hidden nor removed. Damaged or unreadable labels must be replaced.

Warnings

This document intended for the technical personnel is made available in the electronic format at the manufacturer's (reserved area web site).

FOR INSTALLATION

The installation and any subsequent maintenance operation shall be carried out by the personnel skilled and trained on the utilisation of the machine according to the rules in force

The use of kits and/or accessories not type-approved by the manufacturer can not guarantee the observance of safety standards, in particular for live parts.
The installer will be the sole person responsible for any damage improper installation may cause to the machine or to things and people.
The manufacturer declines all responsibility for the use of non type-approved components.

Assembly and any testing operation must be carried out by qualified personnel who have a specific knowledge of the machine operation from the point of view of electric safety and health rules.

The intactness of the machine and its compliance with the standards of relevant installations must be checked by skilled personnel at least once a year.

Package materials must be disposed of in observance of the environment.

For the vending machines of hot drinkts only

The machine is equipped with an automatic washing system for the mixers with the relative water circuit and the brewing unit.
If the machine is not used for some time (weekends, etc.) even for pauses longer than two days, it is recommended to enable the automatic washing functions (e.g. before starting to use the VM.

FOR USE

The machine can be used by children over 8 years and by people having reduced physical, sensorial or mental skills under the supervision of people responsible for their safety or specifically trained on the use of the machine.
Children shall not be allowed to play with the machine by the people in charge of their supervision
Children shall not be allowed to clean or service the machine.

FOR THE ENVIRONMENT

Some tricks will help you to protect the environment:

- use biodegradable products to clean the machine;
- properly dispose of all the packages of the products used to fill and clean the machine;
- power off the machine during inactivity for energy saving.

FOR DISMANTLING AND DISPOSAL

When dismantling the machine, it is recommended to destroy the machine rating plate.

The symbol shows that the machine can not be disposed of as common waste, but it must be disposed of as it is established by the 2012/19/EU (Waste Electrical and Electronic Equipment - WEEE) European Directive and by the national laws arising out of it in order to prevent any negative consequence for environment and human health.
The differentiated collection of the machine at the end of its life is organised and managed by the manufacturer.
For the correct disposal of the machine contact the sales point where you have purchased the machine or our after-sales service.
The unlawful disposal of the machine implies the application of the administrative sanctions provided for by the rules in force.

Attention!

If the machine is equipped with a cooling system, the cooling unit contains HFC-R134a fluoridised greenhouse effect gas ruled by the Kyoto protocol, the total heating potential of which is equal to 1300.

English

TABLE OF CONTENTS

INTRODUCTION 1

TRANSPORT AND STORAGE 1
IN CASE OF FAILURE 2
IDENTIFICATION OF THE MACHINE AND ITS FEATURES 2
POSITIONING THE VENDING MACHINE 3
TECHNICAL FEATURES 3
ELECTRIC ENERGY CONSUMPTION 5
VARIABLE COMBINATION LOCK 6

CLEANING AND LOADING 7

SWITCHES AND SAFETY DEVICES 7
HYGIENE AND CLEANING 8
USING THE VENDING MACHINES OF HOT DRINKS 8

CONTROLS AND INFORMATION 9

PRODUCT LOADING 9

COFFEE BEANS 9
INSTANT PRODUCTS AND SUGAR 10
CUPS 10
STIRRERS 11

PERIODICAL OPERATIONS 11

CLEANING MIXERS AND FOOD CIRCUITS 12
CLEANING THE BREW UNIT 13
SUGAR RELEASE 14
DISPENSING COMPARTMENT 14
MIXER CHANNELS 15
CLEANING THE WATER SUPPLY TANK 15
POWER ON 15
TOUCH SCREEN CLEANING 15
SERVICE INTERRUPTION 15

WASH CYCLES 16

INSTALLATION 17

DOOR SWITCH 17
CONNECTIVITY SWITCH 17
UNPACKING THE MACHINE 18
PAYMENT SYSTEM ASSEMBLY 18
WATER SUPPLY 19
DECALCIFIER 20
ELECTRIC CONNECTION 21
NETWORK CONNECTIONS 22
MASTER / SLAVE CONNECTION 23
STIRRER STACKER CONFIGURATION 23

FIRST POWER-ON 24

SANITISING FOR THE FIRST TIME 24

OPERATION 25

BREW UNIT 25
CUP SENSOR 26
DISPENSING COMPARTMENT LIGHTING 27
CONTROLLING AND ADJUSTING SETTINGS 27
GRINDERS-DOSERS 27
INSTANT DISPENSING 30
CONNECTIVITY 30
TOUCH SCREEN 31

NORMAL OPERATION MODE 31

DRINK DISPENSING 31
SOFTWARE ARCHITECTURE 32

NOTES 33

ACCESS TO PROGRAMMING MENUS 33
ENTRY OF VALUES 34

DAILY ACTIONS 35

CLEANING AND WASHING 35
FILLING CANISTERS 35
MONEY MANAGEMENT 35

SETTINGS OF SELECTIONS 35

ARRANGEMENT OF SELECTIONS 35
ARRANGEMENT OF SELECTIONS BY CATEGORY 35
CATEGORIES OF SELECTIONS 35
PRODUCTS 36
DRINKS 36
RECIPES 37
CANISTERS 40
MECHANICAL LAYOUT 40
ID PRODUCTS 40

MACHINE SETTINGS 41

CONFIGURATION 41
MODIFY INTERFACE STRINGS 42
CUSTOMISE USER'S INTERFACE 42
GENERAL DISPLAY SETTINGS 42
PLAYLIST 42
SETTINGS OF INPUT SENSORS 43
CUP SENSOR 43
CALIBRATIONS 43
OUTPUT SETTINGS 44
MAINTENANCE 46
GENERAL SETTINGS 46
BOILER PARAMETERS 47
PRE-DISPENSING SETTINGS 47
MASTER SLAVE SETTINGS 47

MACHINE INFORMATION **47**
FAILURES 47
STATISTICS 50
FAVOURITES 50
MACHINE IDENTIFICATION NUMBER 50
INSTALLATION DATE 50
TECHNICAL SUPPORT CONTACTS 50

ENERGY SAVING **51**
SETTINGS 51
TIME BANDS 52

PAYMENT SYSTEMS **52**
COMMON PARAMETERS 52
VALIDATOR 53
EXECUTIVE 53
MDB 54
PRICES 56

IMPORT / EXPORT **57**
EVADTS 57
VIDEO 57
IMAGES 58
BACKUP 58
ERROR LOGFILE 58

SYSTEM **58**
EXPORT MENU TREE 58
DISPLAY LOG FILES 58
EXPORT LOG FILES 58
SYSTEM INFORMATION 58
IMPORT / EXPORT THE TRANSLATIONS OF STRINGS 58
EXPORT THE SETTINGS OF RECIPES 58
ADVANCED FUNCTIONALITIES 58
TESTING OF COMPONENTS 59
TEST OF SENSORS AND INPUT DEVICES 59
TEST OF OUTPUT DEVICES 59
TESTING THE TOUCH SCREEN 59
FILLING AND EMPTYING THE BOILER 60
TEST OF MACHINE PARAMETERS 60
RESTORE SETTINGS BY DEFAULT 60
DATE AND TIME SETUP 60
LANGUAGE 60
USERS' PROFILES 61
NETWORK 61
SOFTWARE UPDATE 62
INFORMATION 62

CONNECTIVITY **63**
EMAIL SETTINGS 63

MAINTENANCE **64**
GENERAL FOREWORD 64
MAIN SWITCH 65
CONNECTIVITY SWITCH 65
BREW UNIT MAINTENANCE 66

PERIODICAL OPERATION **67**
SANITISING 67
STIRRER STACKER CONFIGURATION 69
ELECTRONIC BOARDS 70
CPU BOARD 71
ACTUATION BOARD 72
BOILER CONTROL BOARD 74
CURRENT REGULATOR BOARD 74
SWITCH BOARD 74
RELAY BOARD 75
TOUCH SCREEN SUPPLY UNIT 75
FAN REPLACEMENT 76
BOILER HEAT PROTECTION 76
SOFTWARE INSTALLATION AND/OR UPDATE 78

APPENDIX **79**

Introduction

The technical documentation supplied is an integral part of the equipment and it must therefore accompany the equipment whenever it is either moved or transferred to enable the various operators to consult it.

Before starting to install and use the machine, it is necessary to carefully read and understand the content of the documentation since it can supply important information on installation safety, utilisation rules and maintenance operations.

The manual is divided into tree chapters.

The **first chapter** is intended to describe the ordinary filling and cleaning operations that shall be carried out in areas of the machine that can be accessed with the simple use of the door key, without using any other tool.

The **second chapter** contains the instructions for correct installation as well as the information necessary for optimal utilisation of the machine performance.

The **third chapter** is intended to describe the maintenance operations involving the use of tools for access to potentially dangerous areas.

The operations described in the second and third chapter must be carried out only by the personnel who have a specific knowledge of the machine operation from the point of view of electric safety and health rules.

TRANSPORT AND STORAGE

TRANSPORT

To avoid any damage to the equipment and any injury to the people, the equipment must be handled with great care.

While handling, there is the danger of crushing one's hands and/or feet: never forget to use proper work gloves and shoes.

Handle the equipment by using lifting means suitable for the size and the weight of the equipment (e.g. lifting truck).

Lifting means may only be used by personnel fulfilling special requirements.

Please avoid:

- overturning and/or tilting the equipment;
- dragging or lifting the equipment by means of ropes or alike;
- lifting the equipment by its sides;
- shaking or impacting the equipment and its package.

STORAGE

The storage area must be dry and its temperature lie between 0 and 40°C

If the equipment should freeze, condition it at a temperature between 0° and 40°C.

Wait for the temperature of the equipment to adjust to the room temperature before powering it on.

If there is some moisture condensate, please wait for it to dry up completely before powering on the equipment.

IN CASE OF FAILURE

In most cases, any technical problem can be solved by carrying out minor operations. As a consequence, we suggest carefully reading this manual before contacting the manufacturer.

In case of failures or malfunctions that can not be solved, please apply to:

Evoca S. p. A.
Via Roma 24
24030 Valbrembo
Italy - Tel. +39 035606111

IDENTIFICATION OF THE MACHINE AND ITS FEATURES

Every single machine is identified by a specific serial number that can be found on the rating plate arranged inside the machine.

The plate (see figure) is the only one recognised by the manufacturer and it contains all the data that enable the manufacturer to supply technical information of any kind in a quick and safe manner and to facilitate the management of spare parts.

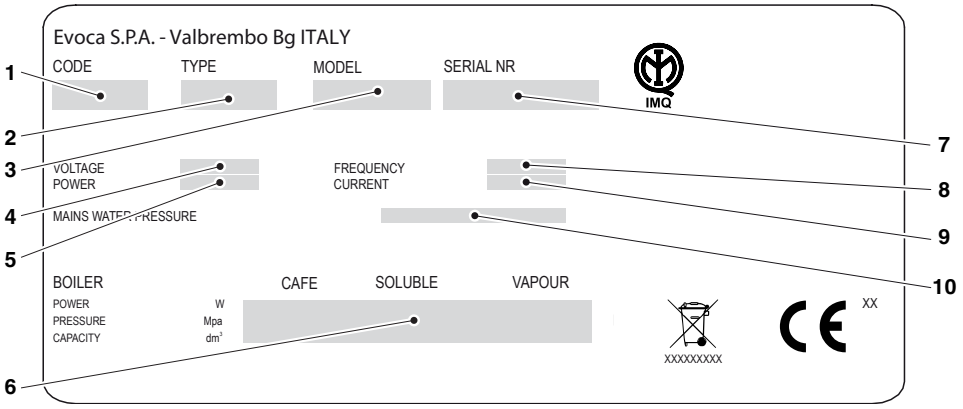

Fig. 1

1. *Product code*
2. *Type*
3. *Model*
4. *Operating voltage*
5. *Absorbed power*
6. *Boiler data*
7. *Serial number*
8. *Operating voltage frequency*
9. *Current*
10. *Water network features*

POSITIONING THE VENDING MACHINE

The machine is not suitable for installation outdoors. It must be installed in a dry room and **far from any source of heat** at a temperature ranging from 5°C to 34°C. It can not be installed in a room where water jets are used for cleaning (e.g. large kitchens, etc.).

The machine must be installed near a wall, but in such a way that the back is min. 4 cm. far from the wall in order to provide for regular ventilation; in no case, it shall be covered with any piece of cloth or alike.

The maximum inclination shall not exceed 2 degrees. If necessary, level it by using the adjustable feet.

TECHNICAL FEATURES

DIMENSIONS

Height	mm 1830
Width	mm 600
Depth	mm 760
Depth with open door	mm 1250
Width with open door	mm 1200
Weight	Kg 135

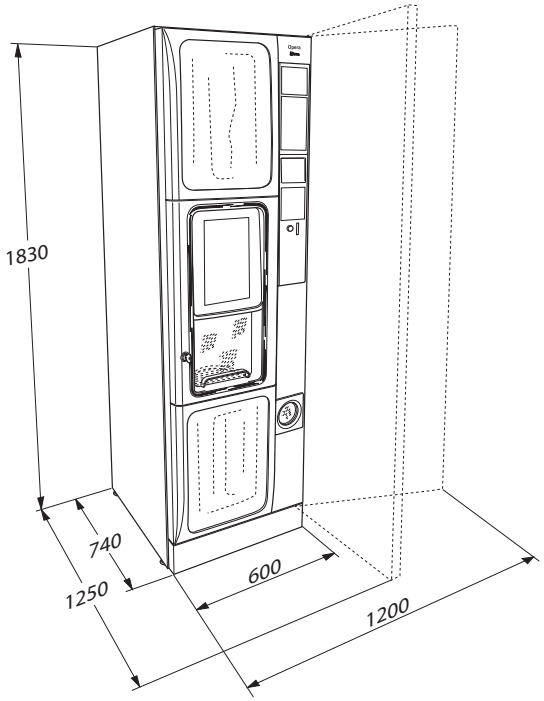

Fig. 2

ELECTRIC CONNECTION

Voltage	V∿ 230/240
Frequency	Hz 50/60
Maximum current	A 8
Maximum current*	A 12
Maximum power	W 1850
Maximum power*	W 2850

* double boiler version

NOISE LEVEL

The continuous, equivalent, weighted sound pressure level is below 70 dB.

WATER SUPPLY

Supplied by the network, the water pressure of which lies between 0.05 and 0.85 MPa (0.5 and 8.5 bar).

The machine software can manage the water supply from an internal tank (optional kit).

CUPS AND STIRRERS

Autonomy of operation of abt. 490 cups and 450 stirrers.

PAYMENT SYSTEM

The machine can be electrically arranged for the systems with an Executive, BDV and MDB protocol and for the assembly of 24 Vdc validators.

The space is not only arranged to accommodate the coin mechanism, but also to assemble the most widespread payment systems (optionals).

SALES PRICES

A different price can be set for every single selection.

The sales price is the same for all selections according to the standard setup.

COIN BOX

Made of sheet iron. Cover and lock available as accessories.

ESPRESSO REGULATIONS

- Coffee granulometry
- Coffee dose
- Water dose

INSTANT REGULATIONS

- Instant powder doses
- Water dose

TEMPERATURE REGULATION

The boiler temperature can be set up via software.

APPROVALS

- Cup presence
- Water presence
- Coffee presence
- Coffee unit position
- Liquid waste empty
- Operation temperature reached

SAFETY DEVICES

- door switch
- connectivity disable micro switch with open door
- manually resettable boiler safety thermostat
- air-break float jam
- anti-flood solenoid valve
- float controlling liquid waste full
- boiler probe short-circuit / interruption control
- protection with board and coin mechanism supply transformer fuse

TIME-BASED PROTECTION FOR:

- Pump
- Coffee unit ratio-motor
- Coffee dispensing
- Grinder
- Column shift motor

HEAT PROTECTION OF:

- Ingredient motors
- Coffee unit ratio-motor
- Coffee release electromagnet
- Pump
- Whipper motors
- Grinder motor

Canister capacity

the machine may have different canister combinations.

The indicative product quantity they can contain is:

Coffee beans (ES version) 3.2 Kg

Coffee beans (2ES version) 2.1+2.1 Kg

	canister	capacity
Coffee instant	1.8 Lt. 2.5 Lt. 4.5 Lt. 6 Lt.	0.4 Kg 0.6 Kg 1 Kg 1.3 Kg
Chocolate instant	2.5 Lt. 4.5 Lt. 6 Lt.	1.7 Kg 3.2 Kg 4.5 Kg
Milk instant	2.5 Lt. 4.5 Lt. 6 Lt.	0.7 Kg 1.2 Kg 1.7 Kg
Tea Instant lemon	2.5 Lt. 4.5 Lt. 6 Lt.	2 Kg 3.5 Kg 5 Kg
Sugar	2.5 Lt. 4.5 Lt. 6 Lt.	2 Kg 3.5 Kg 5 Kg
Ginseng	2.5 Lt. 4.5 Lt. 6 Lt.	1.8 Kg - -
Broth instant	2.5 Lt. 4.5 Lt. 6 Lt.	1.4 Kg 2.5 Kg 3.5 Kg

ELECTRIC ENERGY CONSUMPTION

The electric energy consumption of the machine depends upon many factors such as room temperature and ventilation, inlet water temperature, boiler temperature, etc.

The calculated energy consumption is indicative.

The following energy consumption values have been measured at a room temperature of 22°C:

Temperature reached	Wh 50.2
24h stand-by	Wh 1836

2-boiler version

Temperature reached	Wh ...
24h stand-by	Wh ....

Accessories and kits

Accessories and kits can be mounted on the machine to vary performances thereof.

The accessories and kits that can be applied on the equipment are made available at the manufacturer's.

The accessories and kits are supplied with mounting and testing instructions that shall be strictly followed to preserve the machine safety.

The installer is the sole person responsible for any damage improper installation may cause to the machine or to things and people.

Important !!!

The use of accessories and kits not type-approved by the manufacturer can not guarantee the observance of safety standards, in particular for live parts.

The manufacturer declines all responsibility for the use of non type-approved components.

Assembly and any subsequent testing operation must be carried out by qualified personnel who have a specific knowledge of the machine operation from the point of view of electric safety and health rules.

VARIABLE COMBINATION LOCK

Some models are supplied with a variable combination lock.

The lock is complete with a silver key, with the standard combination, for opening and closing.

It is possible to customise the locks by using a kit made available as an accessory and intended to change the lock combination.

The kit is composed by a change key (black) of the current combination as well as by change (gold) and use (silver) keys of the new combination.

Sets of change and use keys with other combinations can be supplied upon request.

Moreover, further sets of use keys (silver) may be requested by specifying the combination stamped on the keys.

Do not use the programming key for usual opening operations since this may damage the lock.

To change the combination:

1. Open the door of the equipment to avoid having to force the rotation;
2. Slightly lubricate by using a spray inside the lock;
3. Insert the current change key (black) and turn it until you reach the change position;
4. Remove the current change key and insert the change key (gold) with the new combination;
5. Turn the change key slightly several times without completing the rotation
6. Turn it until you reach the close position and remove the change key.

The lock has now assumed the new combination.

The keys of the old combination can be no longer used.

To keep a correct operation all over the time, it is recommended to lubricate the lock every 6 months.

Use spray lubricants for locks.

Other types of lubricants may trap dirt and dust, thus causing the lock to jam.

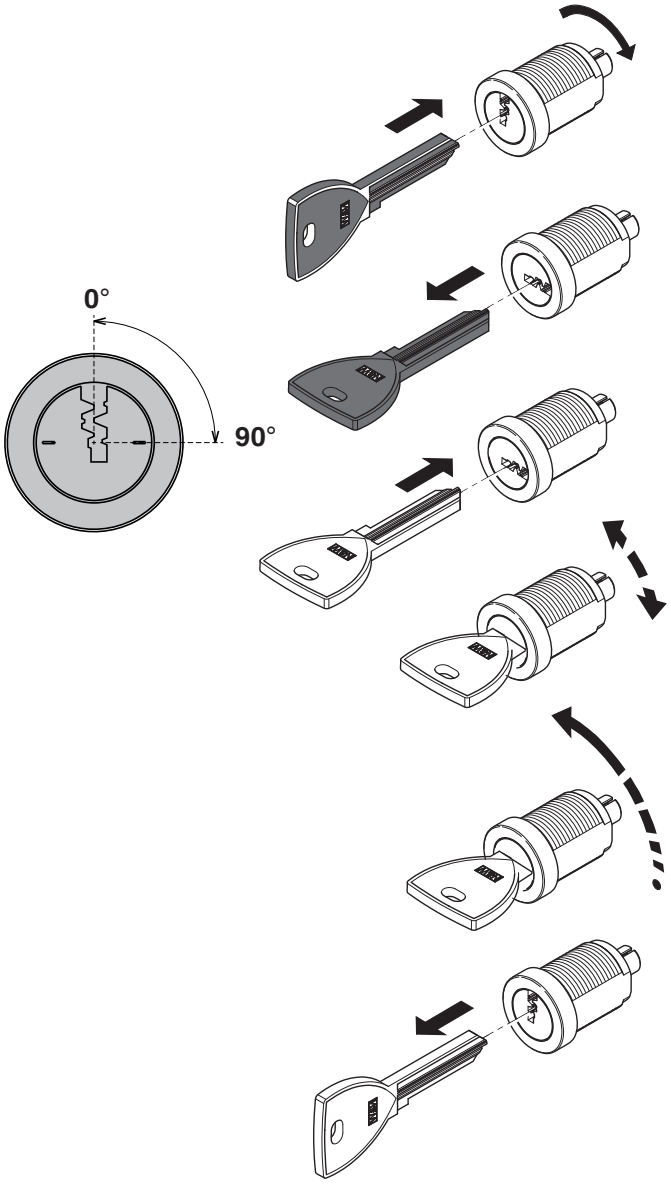

Fig. 3

Chapter 1
Cleaning and Loading

The machine is not suitable for installation outdoors. It must be installed in a dry room at a temperature ranging from 2°C to 32°C. It can not be installed in a room where water jets are used for cleaning (e.g. large kitchens, etc.).

SWITCHES AND SAFETY DEVICES

DOOR SWITCH

Whenever you open the door, a special switch will power off the electric installation of the equipment to allow the user to carry out the ordinary filling and cleaning operations described here below in totally safe conditions.

⚠ All the operations requiring the machine to be directly connected to a source of electricity when the door is open must be ONLY carried out by the personnel qualified and informed on the specific risks involved.

CONNECTIVITY SWITCH

On opening the door, a special switch will deactivate the connectivity components of the equipment.

When the door is open, the drives of functional units and/or remote control are disabled.

⚠ All the operations requiring the machine to be directly connected to a source of electricity and the connectivity functions to be active when the door is open must be ONLY carried out by the personnel qualified and informed on the specific risks involved.

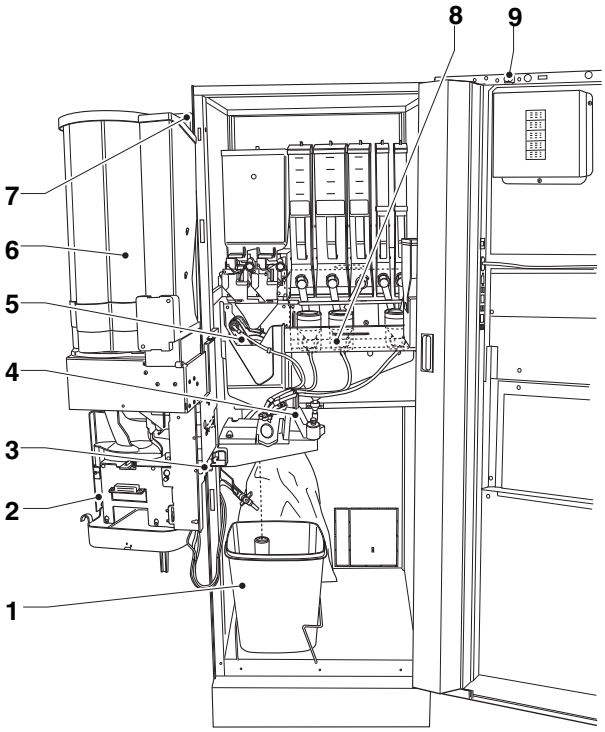

Fig. 4

1. *Waste bucket full*
2. *Dispensing compartment*
3. *Door switch*
4. *Mobile nozzles*
5. *Brew unit*
6. *Cup stacker*
7. *Stirrer stacker*
8. *Mixer*
9. *Connectivity switch*

HYGIENE AND CLEANING

This manual shows the potential critical points and gives the instructions necessary to control any bacterial proliferation.

On the basis of the health and safety rules in force, the operator of the vending machine shall apply the self-control procedures established according to the provisions of the HACCP (Hazard Analysis Critical Control Point) directive and the national laws.

At the time of the installation, it is necessary to completely sanitise the water circuits and the parts in contact with foodstuffs in order to remove any bacterium that may have built up during storage.

It is recommended to use sanitising products to clean the surfaces, even if not directly in contact with foodstuffs.

Some parts of the machine can be damaged by aggressive detergents.

The manufacturer disclaims all responsibility for any damage caused by the non-observance of the above or the use of aggressive or toxic chemical agents.

Never forget to power off the machine before carrying out any maintenance operation requiring the disassembly of components.

USING THE VENDING MACHINES OF HOT DRINKS

(e.g. plastic cups, pottery cups, jugs)

The dispensers of drinks in open canisters may be only used for selling and dispensing drinks obtained by:

- Brewing of products such as coffee and tea;
- Reconstituting instant or freeze-dry packed products;

These products shall be declared as “suitable for automatic dispensing” in open canisters by the manufacturer.

Dispensed products shall be consumed immediately. Under no circumstance shall they be preserved and/or packed for later consumption.

Any other use shall be considered as improper and thus potentially dangerous.

CONTROLS AND INFORMATION

The controls and information for the user are arranged outside.

All messages are displayed on the touch screen of the machine.

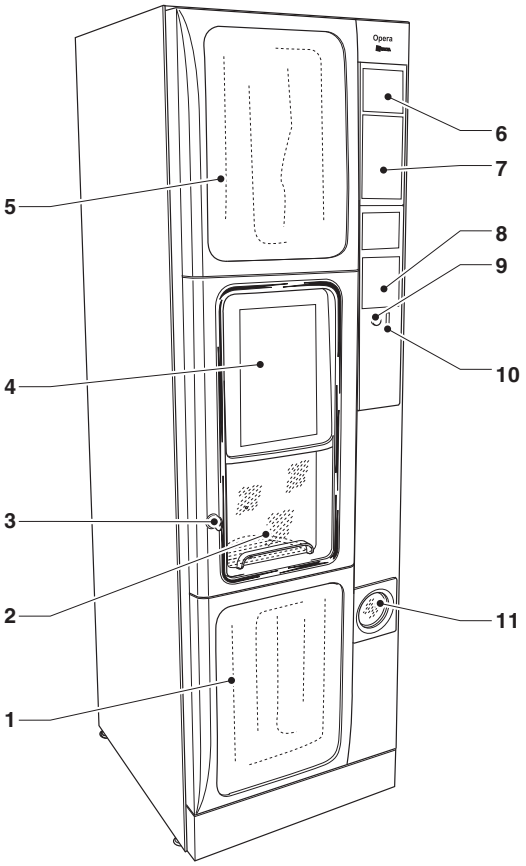

Fig. 5

1. Lower aesthetic panel
2. Dispensing compartment
3. Lock
4. Touch screen
5. Upper aesthetic panel
6. Advertising space
7. Space for bill validator
8. Advertising space or cashless systems
9. Coin return button
10. Coin insert
11. Coin return

PRODUCT LOADING

Before loading products, make sure that they have been preserved according to the producer's instructions for storage and holding temperature.

Before loading products, check the pull date.

The products shall be declared as “suitable for automatic dispensing” in open canisters by the manufacturer.

Products may even be loaded if canisters are partially full.

COFFEE BEANS

It is advisable to use good quality coffee beans to avoid any malfunction of the equipment due to the presence of impurities.

1. open the canister cover.
2. fill with coffee beans.
3. make sure that the canister shutter is open

INSTANT PRODUCTS AND SUGAR

It is advisable to use quality instant products to avoid any malfunction of the equipment due to the presence of impurities.

1. open the instant powder canister cover.
2. fill with instant powder
3. close the cover carefully.

Never compress powder to avoid packing.

Make sure that the instant products you have loaded are not lumpy.

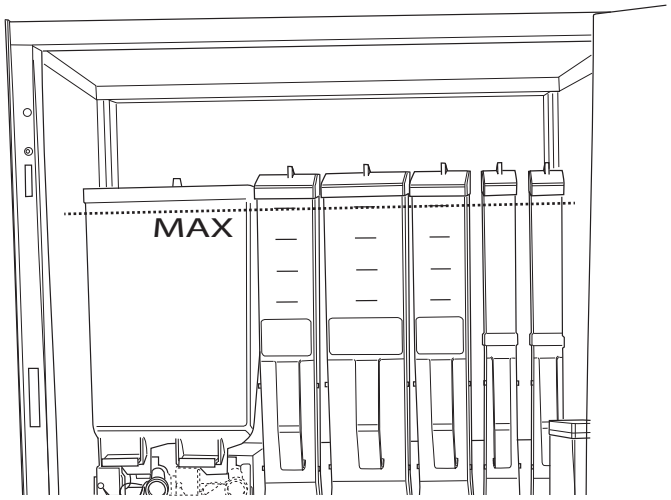

Fig. 6

CUPS

The cup dispenser shelf has got a double articulated joint intended to improve the accessibility to the cup dispenser for filling columns.

Act as follows:

1. Open the machine door
2. Pull the shelf to release the dispensing compartment
3. Turn the shelf to the outside
4. Remove the cover from the cup stacker;
5. Load the cups

STACKER COMPLETELY EMPTY

Act as follows:

1. Fill the columns with cups, **excluding** the one relative to the dispensing hole;
2. Close the machine door and wait for the first full column to reach the dispensing hole;
3. Open the machine door once again and load the column that has remained empty;

STIRRERS

The stirrer dispenser shelf has got a double articulated joint intended to improve the accessibility to the stirrer dispenser for filling stirrers.

Act as follows:

1. Remove the weight from the stirrer stacker and insert the stirrers to be loaded.
2. Extract the strip of paper and make sure that all stirrers are kept horizontally.
3. Re-position the stirrer weight.

ⓘ Stirrers shall be without burrs and bends

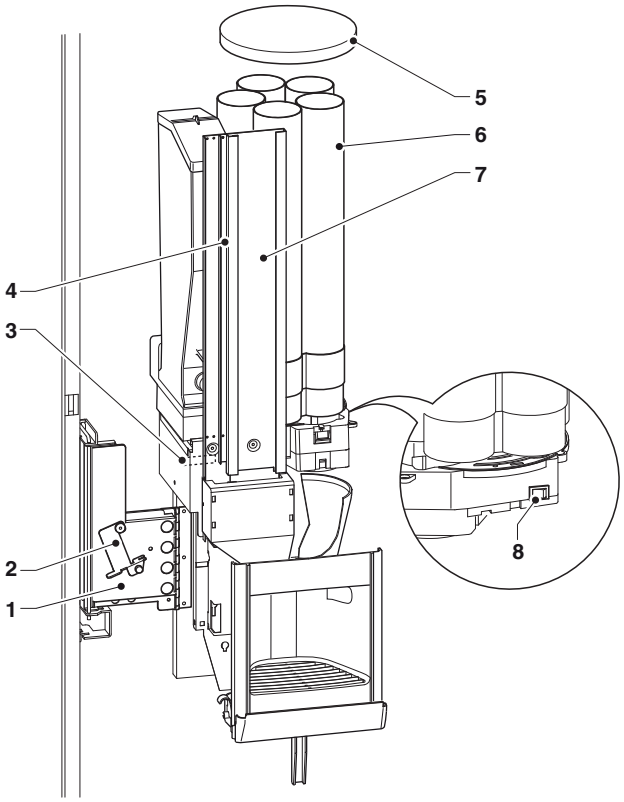

Fig. 7

1. Articulated shelf
2. Articulated joint release lever
3. Shelf positioning magnet
4. Adjustable stirrer guide
5. Cover
6. Cup stacker
7. Stirrer stacker
8. Cup release button

PERIODICAL OPERATIONS

This manual shows the potential critical points and gives the instructions necessary to control any bacterial proliferation.

On the basis of the health and safety rules in force, the operator of the vending machine shall apply the self-control procedures established according to the standards of the HACCP (Hazard Analysis Critical Control Point) directive.

Clean and disinfect the machine and the parts in contact with the foodstuffs, as it is described by the following paragraphs, whenever you load products or more frequently and according to the utilisation of the machine, the inlet water quality and the products in use.

It is necessary not only to remove any powder residue from the parts outside brewers and mixers, in particular in the funnel area, but also to sanitise the parts in contact with the mixer drink.

It is absolutely forbidden to direct water jets against the machine for cleaning.

CLEANING MIXERS AND FOOD CIRCUITS

Whenever products are loaded and/or weekly or more frequently, according to the use of the machine, the inlet water quality and the products in use, sanitise the mixers.

The parts to be cleaned are: powder deposit drawers, mixers and the conduit intended to dispense instant drinks

It is absolutely forbidden to use water jets for cleaning.

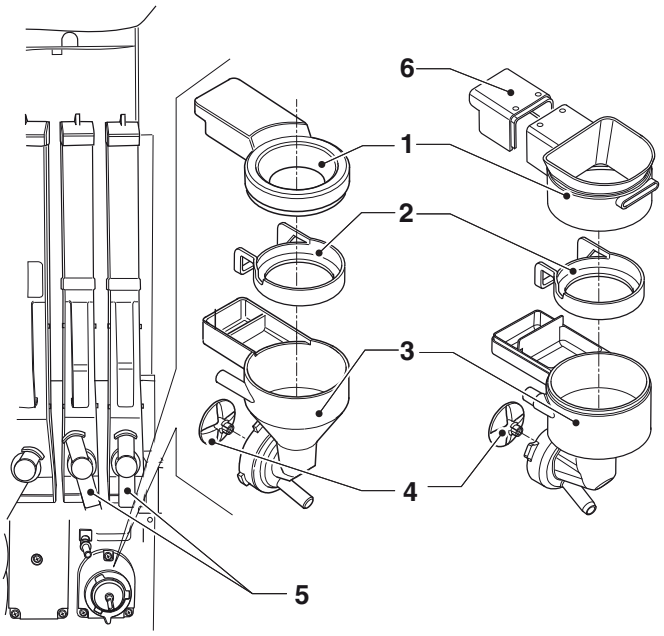

Fig. 8

1. *Powder funnel*
2. *Splash-guard ring*
3. *Water conveyor*
4. *Mixer impeller*
5. *Powder port*
6. *Rear cover*

To clean the mixers, act as follows:

1. open the cover of mixers and lift the powder ports as far as the retainer;
2. detach the instant drink tube from the water funnel connection
3. rotate the ring nut intended to fasten the water funnel counterclockwise and remove the mixer from the machine
4. separate all components (the funnels of instant products, water funnels, conveyors, powder deposit drawers)
5. remove the mixer impeller;

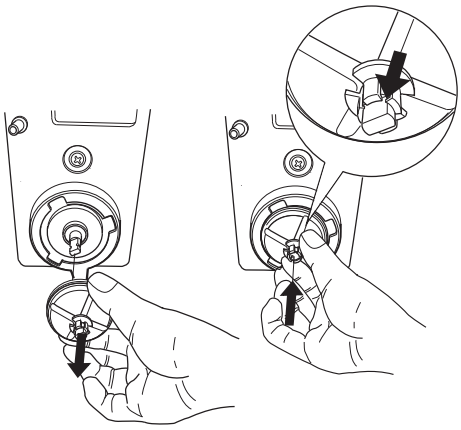

Fig. 9

6. dip the components into a container with the sanitising solution you have prepared before for about 20 minutes, wash and make sure that you have mechanically removed visible residues and films by using, if necessary, pipe cleaners or brushes;
7. re-assemble the impellers
8. re-position the mixer.
   Make sure that the water funnel is properly inserted.
9. rotate the ring nut intended to fasten the water funnel clockwise to secure the mixer to the machine

after having assembled the parts, act as follows, any way:

- wash the mixers and add some drops of the sanitising solution into the various funnels.
- rinse the parts abundantly to remove any residue of the solution in use.

All the operations requiring the machine to be directly connected to a source of electricity must be ONLY carried out by the personnel qualified and informed on the specific risks involved.

CLEANING THE BREW UNIT

Whenever you fill or at least once a week, it is recommended to remove any powder residue from the external parts of the brew unit, in particular in the area of the coffee funnel, the filters and the scrapers.

Properly disassemble the brew unit cover and the coffee funnel at regular intervals.

To release the coffee funnel, just let it slide to the right.

Wash and rinse disassembled parts carefully.

Attention!

It is absolutely necessary to reassemble the cover before setting the machine at work once again.

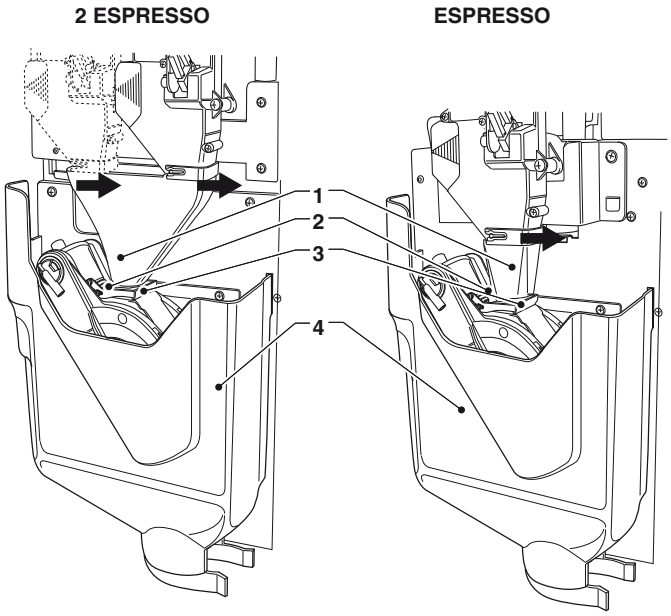

Fig. 10

1. *Coffee funnel*
2. *Filters*
3. *Scraper*
4. *Unit cover*

SUGAR RELEASE

It is necessary to clean the sugar release device by using hot water at regular intervals on the models intended to dispense sugar directly in the cup.

Act as follows:

1. lift the flexible lever to release the nozzle
2. release the return spring from the sugar nozzle
3. extract the pin
4. extract the sugar nozzle;
5. wash and dry carefully.
6. after cleaning, reassemble everything in the reverse order.

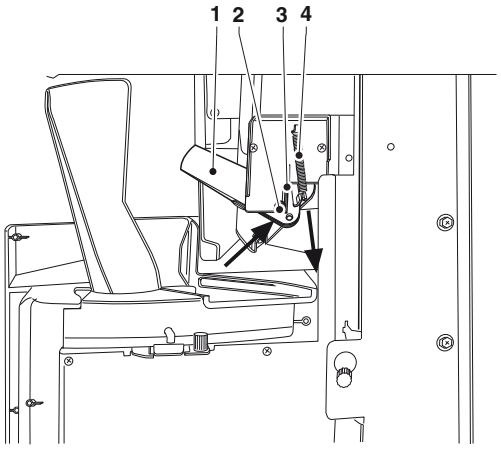

Fig. 11

1. Sugar dispensing nozzle
2. Pin
3. Flexible lever
4. Return spring

DISPENSING COMPARTMENT

To clean the dispensing compartment, remove it from the machine.

1. Remove the knurls intended to lock the compartment;
2. unhook the compartment by acting on the fastening clips;
3. to wash, use a solution of neutral detergent; pay special attention to the display glasses of the cup sensor and of the compartment lighting leds.
4. to wash, use a solution of neutral detergent; pay special attention to the display glasses of the cup sensor and of the compartment lighting leds.

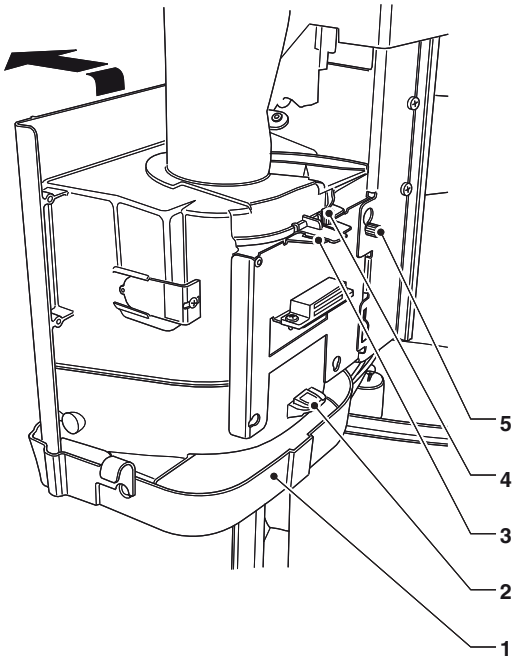

Fig. 12

1. Dispensing compartment tray
2. Dispensing compartment grid hook
3. Cup chute locking clip
4. Cup chute fastening knurl
5. Dispensing compartment fastening knurl

Please Note To clean the grid only, disassemble the dispensing compartment tray and, then, extract the grid by acting on the rear hook.

MIXER CHANNELS

Use a small vacuum-cleaner or a brush to clean the funnel area and the canister support surface by removing any powder residue at regular intervals.

Surfaces can be cleaned by using a wet piece of cloth.

CLEANING THE WATER SUPPLY TANK

Models with water self-supply tank only.

Every day, at the end of the service, empty the water self-supply tank and remove all residues; sanitise it and make sure that you have mechanically removed visible residues and films by using, if necessary, pipe cleaners or brushes.

POWER ON

Whenever you power on, the machine carries out some initial checks by pouring some hot water from the nozzles.

The heating status of boilers is displayed.

Selections are not available until the machine has reached the operation temperature.

TOUCH SCREEN CLEANING

The touch screen is touch-sensitive; any dirt build-up on the touch screen may reduce sensitivity and/or alter operation.

To clean, use a soft and dry piece of cloth and never use abrasive products containing solvents or alcohol.

Clean the touch screen by exerting a slight pressure.

SERVICE INTERRUPTION

If the machine should remain off for any reason for a long period of time, act as follows:

1. empty the canisters completely and wash them carefully by means of sanitising products.
2. empty the grinder completely and dispense till an empty message is displayed.
3. sanitise the mixers, the brew unit and the food circuits.
4. close the cock upstream from the water supply tube and empty the hydraulic circuit completely
5. detach the machine from the mains.

Before setting the equipment at work again, clean and sanitise.

WASH CYCLES

The equipment is ready to execute the wash cycles of the main functional units.

⚠ **Hot water is coming out of the nozzles during the wash cycles, which may be a source of damage for people.**

⚠ **Never put your hands in the dispensing area during wash cycles: danger of burns.**

ⓘ **Wash cycles are not intended to replace the necessity to disassemble the components for sanitising purposes regularly**.

Wash cycles can be scheduled for automatic execution or a warning message may appear for any wash cycle requiring the operator's action (e.g. wash cycle of the brew unit).

Chapter 2
Installation

Installation and any subsequent maintenance operation must be carried out when the **machine is live** and, therefore, by the personnel skilled and trained on the use of the machine as well as aware of the specific risks such a condition may involve.

The machine must be installed in a dry room at a temperature ranging from 2°C to 32°C. It can not be installed in a room where water jets are used for cleaning (e.g. large kitchens, etc.).

ⓘ The machine must be installed in a room where it can be supervised by trained personnel.

ⓘ At the time of the installation, it is necessary to completely sanitise the water circuits and the parts in contact with foodstuffs in order to remove any bacterium that may have built up during storage.

Fig. 13

1. Door switch
2. Connectivity switch

DOOR SWITCH

Only the parts protected by covers and signalled by the following symbol remain live inside the machine.

Before removing these covers, detach the power supply cable from the mains.

To power on the equipment when the door is open, just insert the yellow key into the slot of the door switch.

⚠ All the operations requiring the machine to be directly connected to a source of electricity when the door is open must be ONLY carried out by the personnel qualified and informed on the specific risks involved.

CONNECTIVITY SWITCH

On opening the door, a special switch will deactivate the connectivity components of the equipment.

When the door is open, the remote drives of functional units and remote control are disabled.

⚠ All the operations requiring the machine to be directly connected to a source of electricity and the connectivity functions to be active when the door is open must be ONLY carried out by the personnel qualified and informed on the specific risks involved.

To activate connectivity components (e.g. communication testing) when the door is open, just pull the connectivity switch pin.

If the switch is powered on and off in a tight time span, the equipment will disable connectivity components; to restore them, restart the equipment.

UNPACKING THE MACHINE

After having unpacked the machine, make sure that the equipment is intact.

In case of doubt never use the equipment.

No packing material (plastic bags, foam polystyrene, nails, etc.) should be left within the reach of children since they are potential sources of danger.

Packing materials shall be disposed of in authorised dump sites and recyclable ones collected by specialised companies.

Important !!!

The machine must be arranged in such a way that the maximum inclination will not exceed 2°.

Use adjustable feet to level the machine.

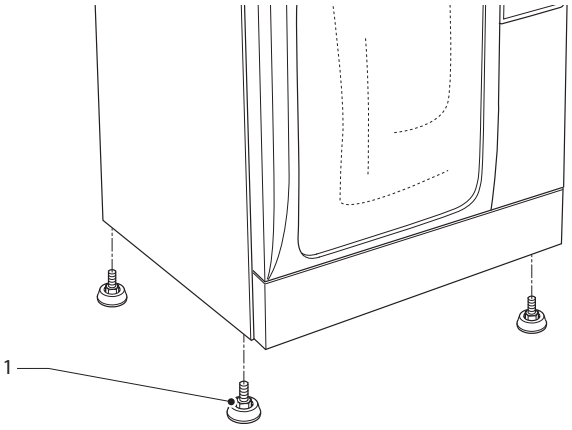

Fig. 14

1. Adjustable foot

PAYMENT SYSTEM ASSEMBLY

The machine is sold without any payment system. As a consequence, only the installer will be liable for any damage that may be caused to the machine or to things and persons by an incorrect installation of the payment system.

The validator can be directly mounted on the machine.

“cashless” systems can be arranged inside the machine

Mount the payment system you have selected by following the instructions and make sure that:

- parameters are properly programmed.
- mechanical regulations are carried out according to the coin mechanism; regulate the change key bracket so as to operate the change key decisively
- Regulate the coin chute end according to the coin mechanism you have assembled. To regulate vertically, just release and reposition it.

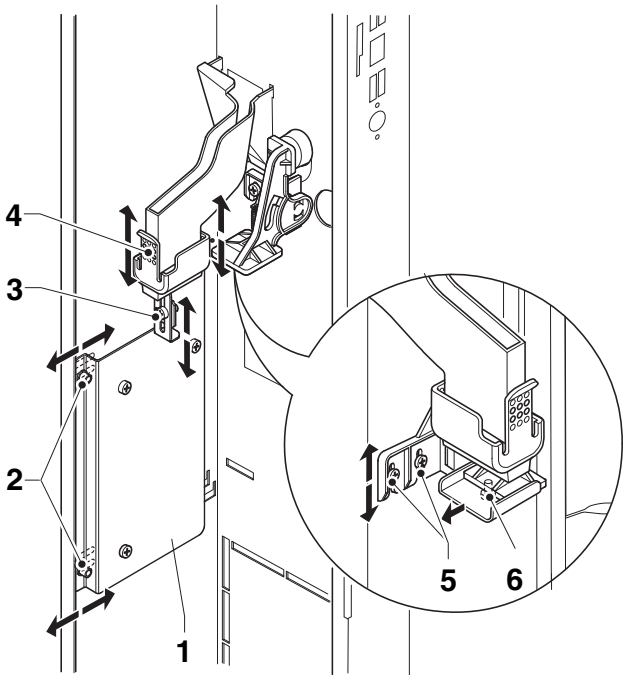

Fig. 15

1. Coin mechanism support
2. Coin mechanism support regulation
3. Coin mechanism fastening joint plate
4. Coin chute end
5. Change button bracket regulation
6. Change button bracket

WATER SUPPLY

The vending machine must be supplied with drinkable water according to the provisions in force in the place of installation of the equipment.

The machine must be connected with the drinkable water mains at a pressure between 0.05 and 0.85 MPa (0.5-8.5 bars).

Let water come out of the water network until it is limpid and free of any trace of dirt.

Use a tube, the min. inner diameter of which is 6 mm. (also available as a kit), capable of withstanding the mains pressure and suitable for use with foodstuff, to connect the water mains to the 3/4” gas union of the water inlet solenoid valve.

It is recommended to apply a tap on the water network outside the machine in an accessible position.

To connect the machine with the water network, use sets of new gaskets and tubes only.

Never re-use the existing material.

WITH NO FILTER PRE-ARRANGEMENT

Connect the water network with the ¾” union of the water inlet solenoid valve by means of a tube that can support the network pressure and of a type suitable for foodstuffs (min. inner diameter 6 mm.).

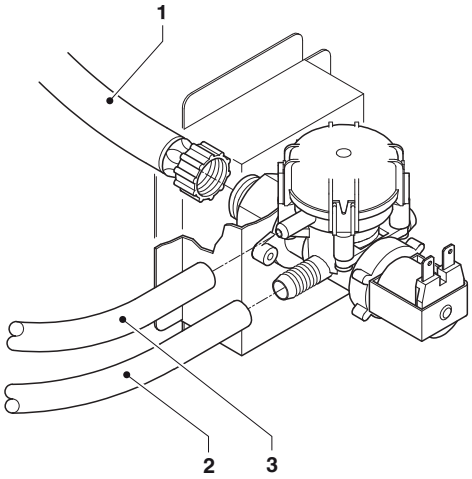

Fig. 16

1. *Water inlet tube*
2. *Supply tube*
3. *Overflow tube*

WITH FILTER PRE-ARRANGEMENT

Connect the water network with the ¼” union by means of a tube that can support the network pressure and of a type suitable for foodstuffs (min. inner diameter 6 mm.).

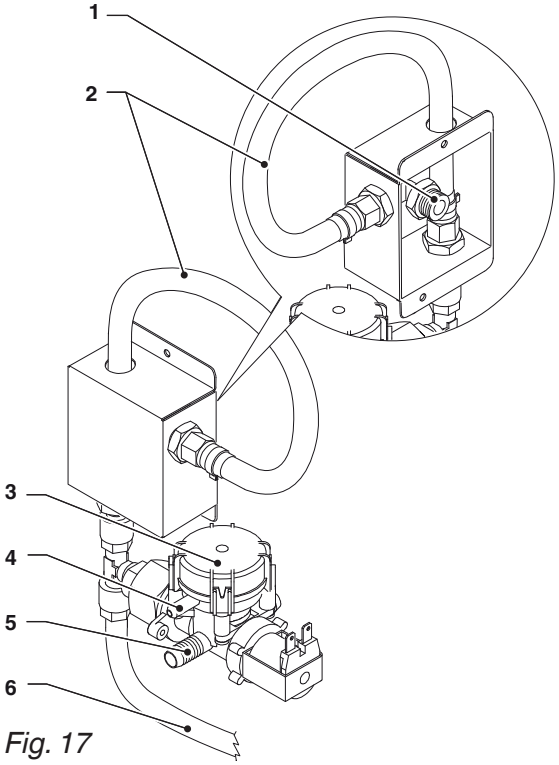

Fig. 17

1. *Water inlet union*
2. *Filter connection pre-arrangement*
3. *Water inlet solenoid valve*
4. *Overflow tube union*
5. *Supply tube union*
6. *To the cold drink cooling unit (optional)*

OVERFLOW DEVICE

The water inlet solenoid valve is complete with an overflow device that can mechanically lock the water inlet as a result of a malfunction of the solenoid valve or the water level control gear.

To restore the normal operation, act as follows:

1. discharge water in the overflow tube;
2. close the water network tap outside the machine;
3. loosen the union intended to fasten the supply tube of the solenoid valve to discharge the residual network pressure and tighten it again.
4. open the cock and power on the machine.

FROM THE TANK

Models with tank only

Use the self-supply kit specific for the device; the kit is supplied with mounting and testing instructions that shall be strictly followed to preserve the machine safety.

Important!!

The use of kits not type-approved by the manufacturer can not guarantee the observance of safety standards, in particular for live parts.

The manufacturer declines all responsibility for the use of non type-approved components.

Assembly and any subsequent testing operation must be carried out by qualified personnel who have a specific knowledge of the machine operation from the point of view of electric safety and health rules.

DECALCIFIER

The machine is supplied without a decalcifier.

In case of connection with a network, the water of which is very hard, mount a decalcifier.

Use decalcifiers, the capacity of which is suitable for the actual use of the machine.

In case of supply from the tank, filtering cartridges can be used.

The cartridges must be replaced at regular intervals, according to the water quality and the manufacturer's instructions.

Decalcifiers, even available as an accessory, shall be regenerated or replaced according to the manufacturer’s instructions at regular intervals.

ELECTRIC CONNECTION

The machine is arranged for electrical operation at a 230-240 V∿ single-phase voltage and it is protected by a 15A fuse.

For connection make sure that the rating plate data correspond to the mains data, in particular: the supply voltage value must lie within the range recommended for the connection points;

It is absolutely necessary to use a main switch in compliance with the installation rules in force, placed in an accessible position. It shall be featured in such a way that it can support the maximum load required as well as ensure complete disconnection from the mains on the conditions of overvoltage category III and, therefore, the protection of circuits against earth faults, overloads and short-circuits.

The switch, the power socket and the corresponding plug shall be located in an accessible position.

The electrical safety of the machine is only ensured when the machine is correctly and efficiently grounded according to the safety standards in force.

It is necessary to check this fundamental safety requirement and, in case of doubt, to require professionally qualified personnel to check the installation carefully.

The supply cable is of a flexible type with a fixed plug.

If necessary, the connection cable shall be replaced by qualified personnel by using only flexible cables of the H05 RN - F or H05 VV-F or H07 RN-F type, 3x1-1.5 mm^2 in cross section.

It is forbidden to use adapters, multiple sockets and/or extensions.

The manufacturer disclaims all responsibility for any damage caused by the non-observance of the precautions mentioned above.

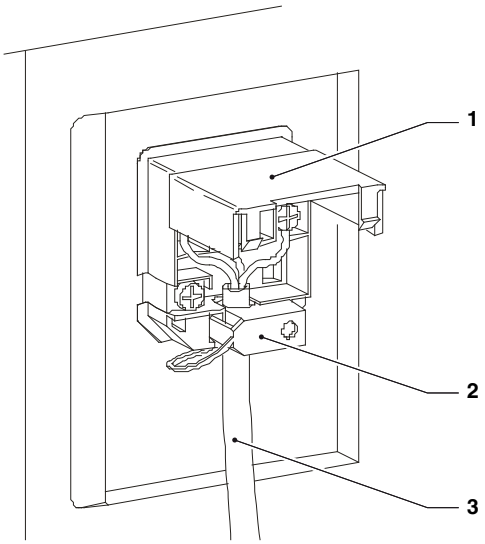

Fig. 18

1. Small lift cover
2. Cable clamp
3. Supply cable

NETWORK CONNECTIONS

INSTRUCTIONS FOR ETHERNET CONNECTIONS

- The connection must be established according to the rules in force and in observance of all the rules defined by the Ethernet standard (the type of cable, maximum lengths of routes,…)
- Connect the equipment with a mains socket by means of an Ethernet cable cat.5E (not supplied).
  The network connector of the equipment is placed at the back of the equipment.
- Configure the network settings from the connectivity menu of the equipment.
  It is recommended to enable the “firewall” function from the network settings of the equipment.

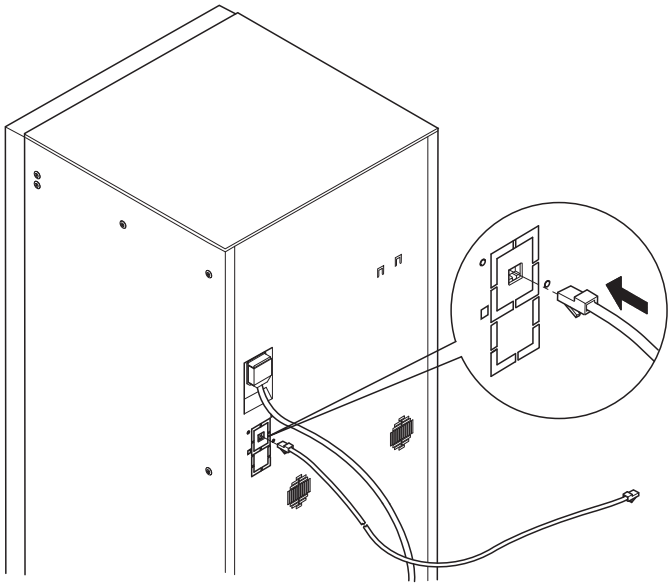

Fig. 19

INSTRUCTIONS FOR WI-FI CONNECTION

- Place the equipment where there is a good reception and intensity of the Wi-Fi signal.
- Never forget to enable the protection functionalities (cryptography) to protect communications against unauthorised access. A network using a more recent encryption system is safer.
  Cryptography “Open” can guarantee no kind of protection.

The Wi-Fi networks in public areas or “hotspots” (such as bars and airports,…) might be unable to guarantee any kind of protection.

- Configure the Wi-Fi settings from the connectivity menu of the equipment and set the encryption used by the network with which the equipment will be connected.
  It is recommended to enable the “firewall” function from the network settings of the equipment.

ⓘ Apply to the local network administrator (systems engineer) to know the suitable network parameters for connection of the equipment.

It is not possible to enable Ethernet and Wi-Fi connections at the same time.

INSTRUCTIONS FOR BLUETOOTH

Make sure that the Bluetooth function is active on the equipment and on the second device.

To establish the communication between the equipment and a Bluetooth device, associate the two devices (see function “network”).

ⓘ The equipment has a firewall (not configurable) intended to lock any undesirable access to the equipment when connected; it is recommended to enable it from programming menus.

MASTER / SLAVE CONNECTION

The equipment is arranged for connection with other automatic vending machines (Master / Slave connection)

Use the special kits for the Master / Slave bank connection of the equipment.

The kits are supplied with mounting and testing instructions that shall be strictly followed to preserve the machine safety.

In case of a Master / Slave bank connection, the equipment enables the operator to use one single payment system and to provide for remote connection for several machines.

In case of a Master /Slave connection and if the function is enabled, the machine is configured as “Master”, i.e. controlling the second machine.

STIRRER STACKER CONFIGURATION

The stirrer stacker can dispense one single type of stirrers, 90, 105 or 115 mm in length.

The stirrer stacker is already configured at works, according to the model.

If the stirrers are of a different length, regulate the stacker guide.

Secure the guide to the stirrer stacker by using the holes corresponding to the length of the stirrers to be dispensed.

The stirrers must slide in the guide freely; use the stirrer weight of adequate length.

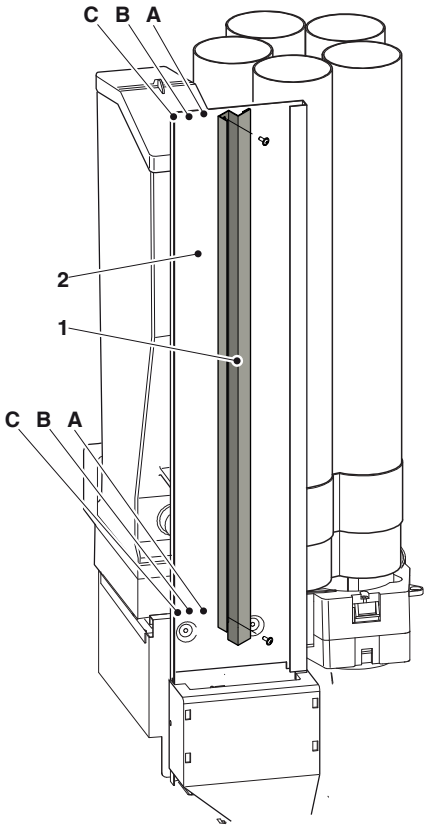

Fig. 20

1. Stirrer guide
2. Stirrer stacker
A. Fastening hole for the stirrer guide (90 mm)
B. Fastening hole for the stirrer guide (105 mm)
C. Fastening hole for the stirrer guide (115 mm)

FIRST POWER-ON

As soon as the machine is powered on for the first time, a guided sequence is displayed for preliminary settings (model, language, name of the machine, …)

The hydraulic circuit will be filled later on (installation).

The installation procedure varies according to whether the water supply of the machine is from the tank or from the system.

WATER SUPPLY FROM THE NETWORK

- As soon as you power on the machine, the network solenoid valve is automatically opened until the air break is filled.
- Open a solenoid valve of the boiler to vent the air in the boiler and in the hydraulic circuit.

Please Note: If there is no water during the installation cycle, the machine will stop and wait for water.

If a considerable amount of air bubbles is formed in the hydraulic circuit, fill the hydraulic circuit by using the "manual installation" special function. After filling the hydraulic circuit, the machine will rotate the brew unit to position it properly; the following is displayed in sequence:

- the software releases of the equipment
- the heat cycle status of boilers.

After completing the heat cycle, drinks are available.

WATER SUPPLY FROM THE TANK

- As soon as you power on the machine, the self-supply pump is started for some seconds.
- Access the programming mode and use the boiler filling / emptying function of the “System” menu.
- At the end of the installation cycle, reset the “no water” failure.

SANITISING FOR THE FIRST TIME

As soon as you install the machine, carefully disinfect the mixers, the tubes intended to dispense instant drinks and the tank (if any) in order to guarantee the hygiene of dispensed products.

It is absolutely forbidden to use water jets for cleaning.

Sanitise by making use of sanitising products.

Wash the mixers and add some drops of a sanitising solution.

After having sanitised, rinse the mixers abundantly to remove any residue of the solution in use.

To dispense water in the mixers, use the rinse function from the "wash" menu.

Important!

The machine is equipped with an automatic washing system for the mixers with the relative hydraulic circuit and the brew unit.

If the machine is not used for a long time (week ends etc.), even for less than two days, it is recommended to enable the automatic washing functions (e.g. before starting to use the VM)

OPERATION

The following paragraphs describe the operation of the main components of the machine.

BREW UNIT

Whenever you power on the machine or make a request for dispensing, the brew unit will make a complete rotation before performing the brew cycle to make sure that the device will occupy the initial position.

DISPENSING CYCLE

Whenever you require a coffee-based selection, the grinder will operate to fill the coffee doser chamber.

When the doser is full, the ground dose is released into the brewing chamber vertically arranged inside the coffee unit.

The ratio-motor engaged onto the pinion (6) will rotate the cranks (5) that will cause the brewing chamber to rotate by 30°.

The upper piston (1) will align with the brewing chamber and move down inside it. The stop position of the piston for brewing will depend upon the quantity of ground product in the chamber.

At the end of the coffee dispensing cycle, the upper piston will move down to mechanically compress the used coffee dose, thus helping water in excess to come out of the third way of the dispensing solenoid valve.

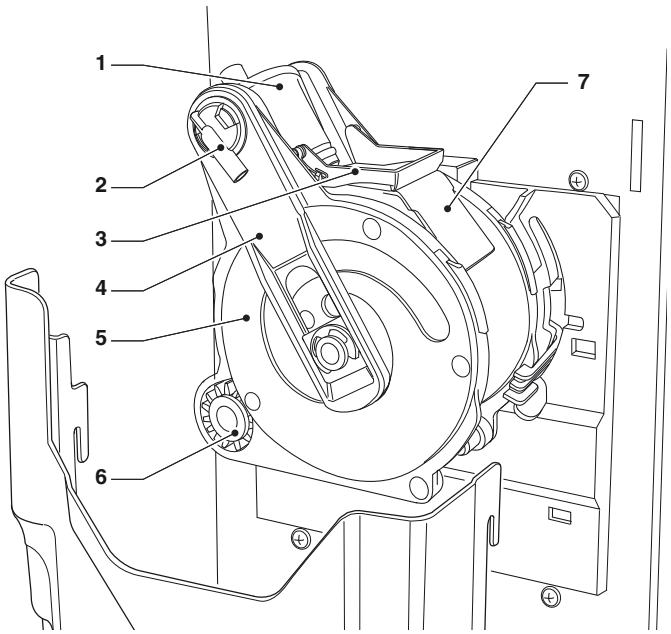

Fig. 21

1. *Upper piston*
2. *Coffee outlet nozzle*
3. *Scraper*
4. *Connecting rods*
5. *Cranks*
6. *Pinion*
7. *Waste coffee chute*

At the end of the cycle, the ratio-motor is driven in the opposite direction, thus lifting the upper piston and rotating the brewing chamber to the unload side, opposite the dispensing side; the lower piston (8) will move up.

After having reached the unload position, the ratio-motor will reverse the direction of rotation once again, thus moving the brewing chamber back into its standby position.

The scraper (3) will retain and drop the coffee dose whereas the lower piston (8) will move back into its standby position.

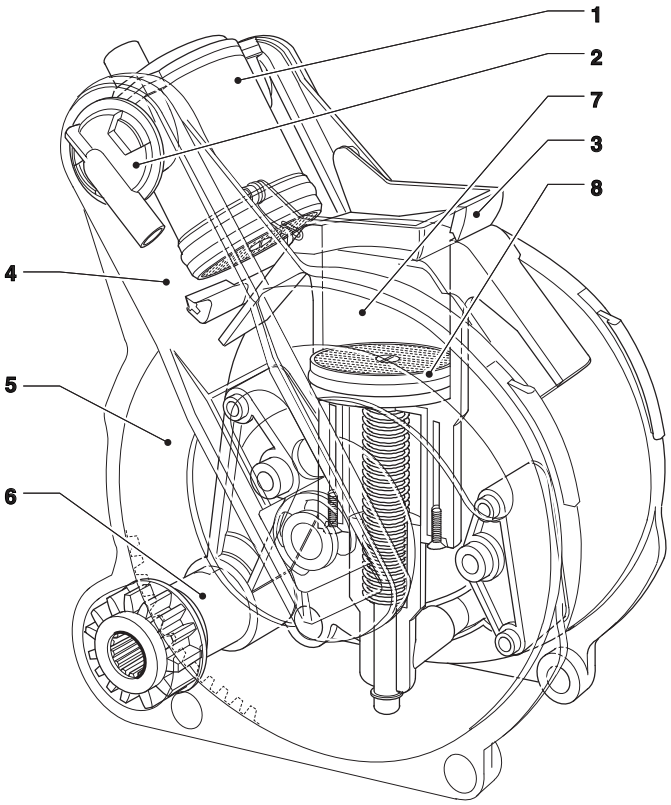

Fig. 22

1. *Upper piston*
2. *Coffee outlet nozzle*
3. *Scraper*
4. *Connecting rods*
5. *Cranks*
6. *Pinion*
7. *Brewing chamber*
8. *Lower piston*

BREWING CHAMBER VOLUME

The coffee doses the brew unit may use vary according to the models of the brew unit.

The upper piston will automatically position.

The unit may use the doses specified here below according to the model or diameter of the brewing chamber.

Brew unit	doses
Z4000 SE (Ø 38)	6 - 8.5 gr.
Z4000 NE (Ø 46)	7.5 - 15 gr.
Z4000 HRC (Ø 43)	7 - 13.5 gr.

CUP SENSOR

Some models are equipped with a cup sensor intended to detect the presence of any object that may be placed between the reflex reflector and the sensor itself.

The sensor has 2 leds intended to signal the state:

- Green: sensor power supply.
- Orange: cup presence or absence

For a correct operation it is necessary to keep the emitter and the reflex reflector in front of it clean.

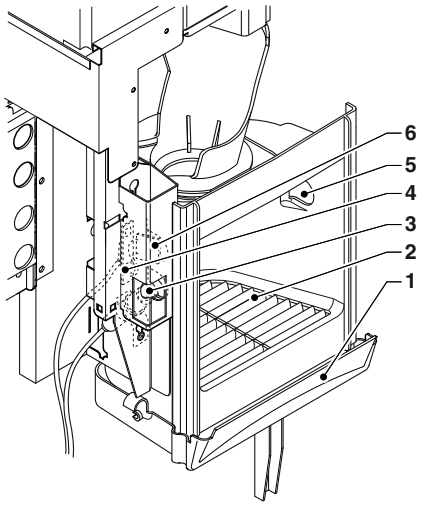

Fig. 23

1. *Dispensing compartment tray*
2. *Grid*
3. *Cup sensor*
4. *Board*
5. *Display glass for reflector*
6. *Compartment lighting*

DISPENSING COMPARTMENT LIGHTING

Some models are equipped with LEDs intended to light up the dispensing compartment.

The LEDs turn on while the drink is being dispensed and they remain on for some seconds after the end of the dispensing cycle.

CONTROLLING AND ADJUSTING SETTINGS

To achieve the best results compared with the product in use, it is recommended to check:

- The used coffee dose shall be slightly compressed and moistened.
- The granulometry of ground coffee
- The coffee dose of ground coffee
- The dispensing temperature
- The water dose

GRINDERS-DOSERS

One or two grinders-dosers can be mounted on the equipment, according to models.

The grinder-doser can be equipped with the automatic regulation device of the grinding degree (optional)

The operations described by this paragraph are referred to one single grinder-doser.

COFFEE DOSE REGULATION

The dose regulation lever can be positioned in one of the 10 reference notches. It shall be kept in mind that:

- if you lift the lever, the dose will increase;
- if you lower the lever, the dose will decrease;
- every single notch will vary the dose by about 0.35 gr.

To take the dose, just remove the brew unit and use the corresponding function in the menu "test in technician menu" (see the relative paragraph).

Important!!!

The dose you can get is approximately between 6 and 9.5 gr; if you vary the grinding degree, the dose will slightly vary.

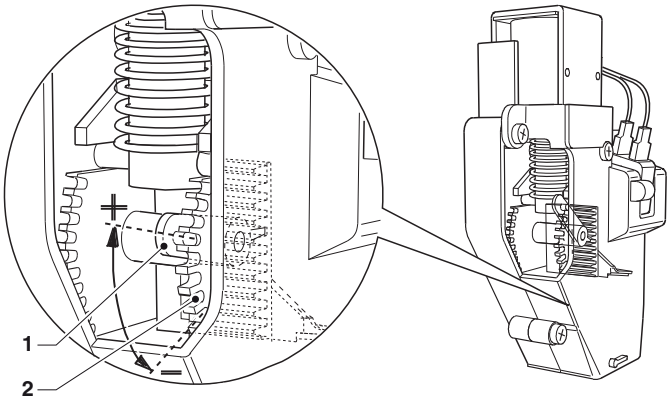

Fig. 24

1. Dose regulation lever
2. Reference notches
3. Doser

MANUAL GRINDING REGULATION

If it is necessary to change the grinding degree, properly act on the corresponding grinder knob and more precisely:

- turn counterclockwise to obtain a coarser grinding degree;
- turn clockwise to obtain a finer grinding degree;

It is recommended to vary the grinding degree during the operation of the coffee-grinder motor.

Please Note: after having changed the grinding degree, make at least 2 selections to check the new granulometry of ground products more carefully:

The finer the grinding degree, the longer the time required to dispense the coffee drink and viceversa.

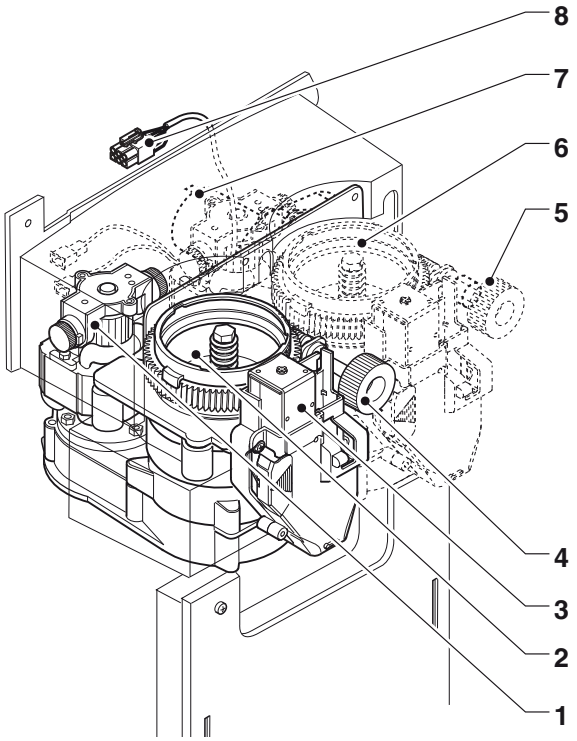

Fig. 25

1. Grinder motor
2. Grinder
3. Coffee release electromagnet
4. Grinding regulation knob
5. Grinding regulation knob
6. Second grinder (2ES models)
*7. Automatic grinding regulation motor**
8. Grinder connector
**. models with automatic regulation*

AUTOMATIC REGULATION OF GRINDING WHEELS

A device intended to regulate the distance between the grinding wheels and, therefore, the grinding degree, automatically can be mounted on the grinder(s) as a standard or as an optional.

The device for the automatic regulation of the grinding wheels can keep the quality of coffee drinks constant all over the time by balancing any variation due to the product, the environment and the wear of the grinding wheels.

The automatic regulation of grinding wheels must be enabled from the menu.

To monitor the automatic regulation parameters of grinding wheels (grinding time and brew time) properly, the machine will assume the following as a reference:

- Brew time: time you wish to dispense the water quantity set up in the brew dose of reference.
- Brew dose: water dose of reference to measure the dispensing time.

The system will make sure that the brew time required to dispense the water quantity established by the recipe is actually reached. Otherwise, it will vary the grinding degree by acting on the bidirectional motor controlling the distance between the grinding wheels.

In all coffee-based selections, whose water doses are equal to or higher than the brew dose of reference, the brew time and the grinding time of the coffee dose will be measured.

Example:

Cappuccino selection with 55 cdv and whose brew dose of reference is 50: the brew time and the grinding time will be measured for the set-up brew dose (50), the remaining water quantity (5) is ignored.

In coffee-based selections, whose water doses are lower than the brew dose of reference, they are left out of consideration for the purpose of automatic regulation.

The coffee dose and water quantity being the same, the grinding degree will directly affect the brew time.

The automatic grinding regulation system will act to align the actual time with the one set up.

The change in the grinding degree is a result of a change in the brew time; grinding wheels will gradually approach (finer granulometry) to avoid compressing coffee.

During the normal operation of the machine, you can keep the optimal regulation of the grinding degree by constantly monitoring the brew time.

Please Note: To check the new brew time carefully, keep in mind that the effect of any automatic change in the grinding degree is perceived after some selections.

After the regulation has become stable, please also check the ground coffee quantity that can slightly change.

DEACTIVATION OF AUTOMATIC REGULATION

You can disable the operation of the automatic regulation from the machine settings for whatever reason it might be necessary.

The grinding wheels remain at the distance reached at the time when you disable the operation of the automatic regulator.

MOTOR-DRIVEN REGULATION OF GRINDING WHEELS

If you should change the distance to a considerable extent for any reason whatsoever, e.g. in order to service the grinding wheels, you can act manually by setting the change you wish via software.

This value is expressed in 1/6 of a turn of the grinding wheel ring nut.

To increase granulometry (coarser grinding), the automatic regulation occurs in one single operation;

To decrease granulometry (finer grinding), the automatic regulation occurs when the coffee grinder motor is operating.

It is recommended to pick up the coffee release to avoid clogging the brew unit.

INSTANT DISPENSING

The dispensing cycles of the various selections are conceived to achieve the best result in terms of production rate and drink quality.

Instant drinks are dispensed according to a recipe with max. 4 ingredients.

Recipes can be modified from the programming menu.

Every single parameter (grams, water quantity, mixing, ...) can be modified for each ingredient from the “recipes” function.

The dispensing sequence of every single ingredient inside a recipe is programmable.

Powder is intermittently dispensed for chocolate-based selections and before water for the selections based on instant coffee.

Attention !!!

After modifying the parameters of instant powders, make sure that the mixer is properly rinsed without leaving any powder residue.

DOSER CALIBRATION

To dispense instant powders properly, set up the flow rate of every single doser in gr/s to calculate the grams to be dispensed.

Calibration is carried out from the programming menus.

BOILER TEMPERATURE REGULATION

The boiler temperature is controlled by the software;

The temperature can be directly regulated from the menu.

CHANGES IN THE SETUP OF INSTANT PRODUCTS

The dose of instant powders and the water dose can be modified from the menu of recipes.

CONNECTIVITY

The equipment can communicate via network and send notices by email.

The equipment can also communicate with Bluetooth at a short distance.

Bluetooth is a standard to exchange information through a short-range radio frequency

ⓘ To be able to use connectivity functions and send notices by email, please establish an active network connection.

ⓘ The equipment sends notices by email. It is impossible to receive emails on the equipment.

Connectivity functions must be enabled from the menu.

ⓘ The equipment can not be used for Internet access from other network-connected devices or supply network services.

The equipment can support the main Wi-Fi encryption systems (cryptography).

A Wi-Fi network using a more recent encryption system is safer.

ⓘ If the door is open, the connectivity functions of the equipment are disabled.

TOUCH SCREEN

Use the fingers only to interact with the touch screen. Never use any sharp object.

If the touch screen is not used and the same screen page is displayed for a long time, a residual or blurred image might appear. Power off the touch screen (energy saving) or set up an animated screen saver when not used.

The use of high-quality contents affects general performances and occupies memory space.

TOUCH.

Touch icons, functions and objects to activate the function or to open context menus.

Fig. 26

MOVE AND DRAG

To move and drag icons and objects, touch and drag to the new position

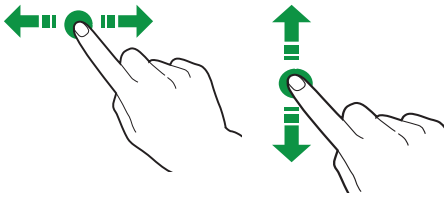

Fig. 27

SCROLL

Swipe your finger on the touch screen to the right, to the left, up or down to scroll values, screen pages and functions.

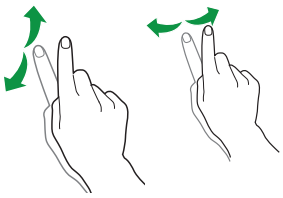

NORMAL OPERATION MODE

The representation and arrangement of icons/screens in the manual is merely indicative and it may deviate from the one displayed by the equipment according to settings (layouts, themes and/or icons).

The equipment in normal operation mode shows the screen page with the selections made available.

If some settings are customised (e.g. a different arrangement of drinks), some selections might be not displayed: just scroll the screen page.

The selections might be grouped by category, according to settings.

In case of a malfunction, a message will appear to show the failure / error.

Some selections might be disabled with some types of failures (e.g. empty product canisters, …)

DRINK DISPENSING

Select a drink

The screen page can be displayed with the customisations of the drink.

The preparation state is displayed during the preparation of the drink; as an alternative, you can see entertainment contents (e.g. a video).

SOFTWARE ARCHITECTURE

The equipment requires an operating system and the application software for operation.

Settings / customisations are managed by the application software.

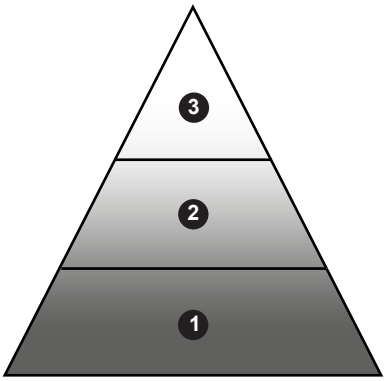

Fig. 28

1. *Operating system*
2. *Application software*
3. *Settings / customisations*

OPERATING SYSTEM

The operating system is intended to supply basic functionalities to manage resources, communication with peripheral units and to coordinate the various activities.

The operating system is necessary to install the application software and use the equipment.

ⓘ The update of the operating system completely deletes the CPU memory, including the application software, the settings and customisations made and statistical data.

APPLICATION SOFTWARE

The application software enables the operator to use the functionalities of the equipment and to change settings through the graphic interface (GUI).

The application software is unable to work without the operating system.

ⓘ The update of the application software does not delete the operating system as well as the settings / customisations made.

SETTINGS AND CUSTOMISATIONS

The application software enables the operator to set up and customise recipes, settings and graphic interface.

Settings / customisations also include the database of the machine configurations (layout).

These settings can be saved for import and use on other equipment.

ⓘ Before using the settings / customisations on other equipment, check the software releases of the application and operating system.

Make sure that they are updated or, at least, that their release is the same as the one from which they have been exported.

Settings / customisations are not compatible with previous software releases.

Programming notes

The main functions required to manage the machine operation as well as possible are briefly explained here below, not necessarily in the order they are displayed in the menus.

The representation of icons/screens in this manual is merely indicative and it may deviate from the one displayed by the machine according to settings (layouts, themes and/or icons).

ACCESS TO PROGRAMMING MENUS

When the door is closed, touch and hold down the logo up and in the middle of the touch screen for some seconds.

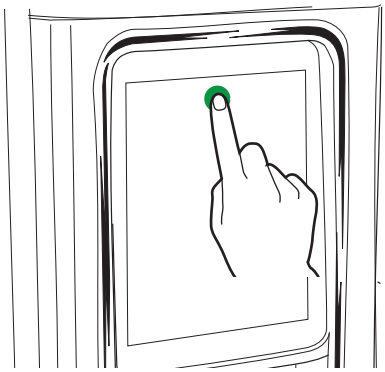

Fig. 29

You may be required to enter a password to access programming menus, according to settings.

Enter the password to access enabled menus.

The passwords (by default) are:

- Technician (4444),
- Vending machine (3333),
- Filler (2222)
- User (1111)

MENU OF FUNCTIONS

It shows the functions available for the current user profile and the “forward / backward” icons.

Touch the MENU to display the menu functions of the equipment.

EXIT

Touch EXIT to quit the programming menus.

The screen page of selections is displayed.

SEARCH

Touch SEARCH to search for the functions inside the menu.

Type the name of the function; while you are typing, the functions including the text you have typed will appear on the screen (search results).

Touch the function you wish by choosing among the search results.

FAVOURITES

The FAVOURITES are links with the functions frequently used.

After adding a function to your FAVOURITES , you just have to display the FAVOURITES and touch the function for rapid access.

Touch the FAVOURITES to access the functions frequently used and stored as FAVOURITES .

ADD A FUNCTION TO THE “FAVOURITES”

from the function touch ☆; colour will change (★is activated)

REMOVE A FUNCTION FROM THE “FAVOURITES”:

- touch the function you wish to remove from the favourites so as to access the function.
- touch ★: colour will change (☆is deactivated)
-

INFORMATION AREA

To display the information on the equipment (software release, …)

MESSAGE AREA

It displays information messages, e.g. statistics on the selections most required,…

FAILURE AREA

It displays the failures on the equipment.

MAINTENANCE INFORMATION AREA

It displays the information on maintenance deadlines

The current date/time is set up as the latest maintenance action by means of the NOTICE OF MAINTENANCE .

ENTRY OF VALUES

The following methods are made available inside programming menus to enter / modify values:

KEYBOARD

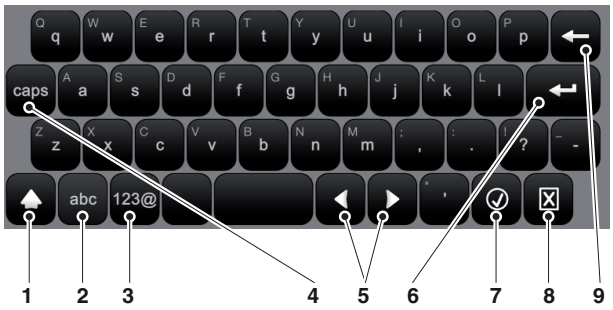

Fig. 30

1. *Shift key*
2. *Keyboard switch “numbers/symbols” to “letters”*
3. *Keyboard switch “letters” to “numbers/symbols”*
4. *Caps lock*
5. *Move the cursor within the text*
6. *New line (text on two lines)*
7. *Confirm*
8. *Cancel*
9. *Delete (back space)*

NUMERIC KEYPAD

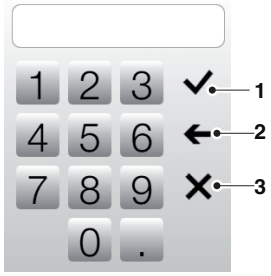

Fig. 31

1. *Confirm*
2. *Delete (back space)*
3. *To close the keyboard*

CHECKBOX

Touch the checkbox to enable / disable the option.

Fig. 32

DROP-DOWN LISTS

Touch to open the drop-down list and select the value.

Fig. 33

VALUE PICKERS

Scroll and select the value you wish

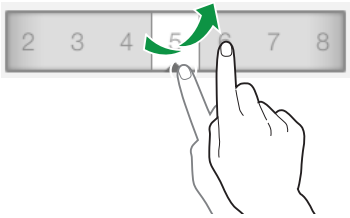

Fig. 34

DAILY ACTIONS

It groups all the functions concerning daily or most frequent operations (wash cycles, waste counter reset, …)

CLEANING AND WASHING

Automatic washing and rinsing functions of the functional units of the equipment (brewer, mixer, …).

Choose the components you wish to wash.

Some parameters might be required for some wash cycles (e.g. the water quantity for use, …)

FILLING CANISTERS

If the level control of canisters is disabled, the function is not accessible.

The function is intended to manage pre-alarms properly or to display an empty message for canisters (if enabled).

After loading products, specify the product quantity you have loaded.

MONEY MANAGEMENT

Functions active for the models with payment system only.

From the function you can:

- empty the coins from change tubes of the coin mechanism
- load the coins into the tubes of the coin mechanism for the change function
- check the total amount of money in the coin mechanism

SETTINGS OF SELECTIONS

ARRANGEMENT OF SELECTIONS

Choose the arrangement of the selections displayed in normal operation mode among those pre-defined.

To change the order of selections, drag the icon of the selection to the new position.

To make a selection available in normal operation mode, drag the icon of the selection from the selections made available and vice versa.

ARRANGEMENT OF SELECTIONS BY CATEGORY

If the management by selection category is active, you can group the selections by type.

You can choose the arrangement of selections for each category.

To change the order of selections, drag the icon of the selection to the new position.

To make a selection available in one category, drag the icon of the selection from the selections made available and vice versa.

CATEGORIES OF SELECTIONS

To create, modify and remove the categories of selections.

The categories of selections are displayed in normal operation mode and they enable the operator to subdivide selections by type of drink (e.g. “drinks with milk”)

The function enables the operator to:

- create a new category +
- duplicate and modify a category.
- remove a category
- enable / disable categories made available.

CREATE / MODIFY A CATEGORY

You can assign or modify the name, the description and the image representing the category displayed in normal operation mode.

PRODUCTS

SNACKS AND FOOD

The equipment enables the operator to manage some parameters of the snack and food selections of “master / slave” connected equipment.

From the screen page you can:

- Create new snack and/or food selections +.
- Remove a snack and/or food selection 🗑
- Duplicate ⧉ and customise ✎ the snack and food selections

After creating a selection, you can:

- assign or modify a univocal name of the selection.
  The univocal name is used as a reference inside the software.
  If you wish to dispense the same product from several spirals of the “slave” machine, use the function “selections by rotation” of the “slave” equipment.
- assign or modify the name of the selection in the various languages made available.
  The name of the selection is displayed in normal operation mode beneath the image of the selection.
- assign the selection number associated with the spiral.
- enter the bar code number on the product and a code associated with the product (e.g. for statistical purposes)
- assign the text to be displayed on the price display units (if any) of the “slave” machine
- Associate a *playlist* of multimedia contents for display during the dispensing cycle.
- associate an image with the selection
- associate an image of the nutritional product information.
- define some features of the snack / food selection (e.g. low salt content, biological, …)
  The features set up are used to search for the products in the category “product fit for you”.

DRINKS

The selections currently used, those available and those not compatible with the configuration in use (layout), but compatible with other configurations (layout) appear on the screen.

From the screen page you can:

- Create new drinks and associate a recipe +.
  The software makes sure that the recipe is compatible with the configuration (layout) of the equipment.
  If ❗ appears, it means that incompatibility has been found out.
- Remove a drink 🗑
- Duplicate ⧉ and customise ✎ the drink.

CREATE / MODIFY A DRINK

You can:

- Assign / modify the name of the drinks displayed in normal operation mode.
- Choose which recipe to use to prepare the drink.
  The software makes sure that the recipe is compatible with the configuration (layout) of the equipment.
  If ❗ appears, it means that incompatibility has been found out.
- Change the image associated with the drink; touch the image to choose the new image.
- Associate a *playlist* of multimedia contents for display during the dispensing cycle.
- Dispense the test drink.

RECIPES

The recipes currently used, those available and those not compatible with the configuration in use (layout), but compatible with other configurations (layout) appear on the screen.

You can:

- Create a new recipe + .
  Once created, the new recipe is saved in the category “not available”.
  Associate the recipe with the drink.
  The software makes sure that the recipe is compatible with the configuration (layout) of the equipment.
  If ! appears, it means that incompatibility has been found out.
- Remove a recipe
- Duplicate and customise a recipe

CREATE A NEW RECIPE

The guided procedure enables the operator to create a new recipe.

A screen page appears where:

- to assign a new to the new recipe
- to set up a wait time (in seconds) for the message “Serve yourself” from the end of dispensing.
  The wait time enables the tubes to get empty and to drip in the cup.
- touch and then “Add preparation” to add the products composing the recipe (e.g. Coffee, Chocolate, …)
  The screen pages of parameters vary according to the product you add (espresso coffee, fresh brew coffee, instant powders, …)
- To add customisations, touch and then “Add customisation”
  You can set the various parameters for each customisation.
- save the settings and go back to the main screen page.

From the main screen page with “Test recipe” you can dispense a test selection to check the recipe you have created.

You can modify the recipe after the test selection.

MODIFY A RECIPE

From the screen page of the recipe you can:

- modify the name of the recipe
- to set up a wait time (in seconds) for the message “Serve yourself” from the end of dispensing.
  The wait time enables the tubes to get empty and to drip in the cup.

You can add further ingredients and/or customisations to the recipe.

From the screen page of the recipe touch to add further ingredients and/or customisations.

To save the settings of every single ingredient (e.g. water quantity, powder, …), touch the ingredient bar to open the context menu

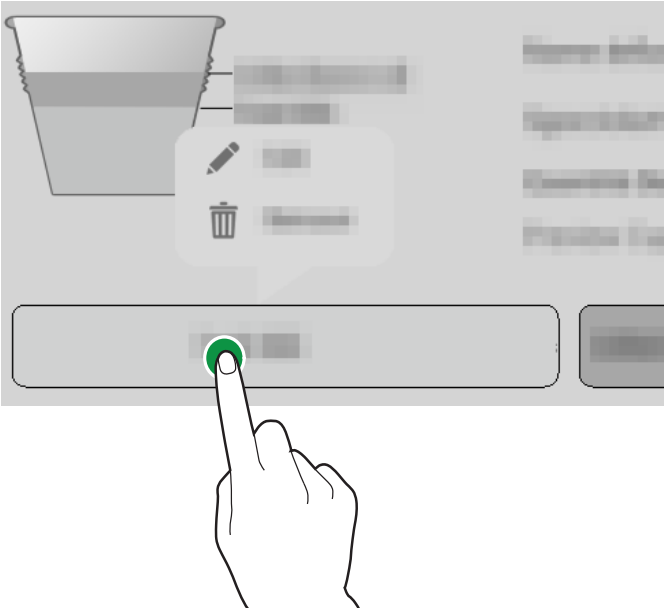

Fig. 35

- touch EDIT to change the parameters
- touch REMOVE to eliminate the ingredient

To move an ingredient before or after another ingredient, just drag the bar of the ingredient.

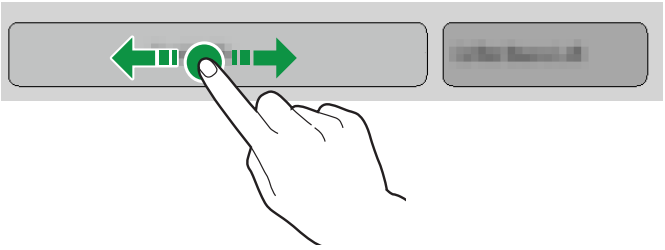

Fig. 36

After changing the parameters, save the settings and go back to the main screen page.

From the main screen page with “Test recipe” you can dispense a test selection to check the recipe you have modified.

BASIC PARAMETERS

For every single recipe you can set up the basic parameters, such as:

- the name of the ingredient
- the doses (water and powder)
- dispense a test drink

Some customisations can be added to the recipe (e.g. chocolate strength, sugar variation, total water quantity …).

Every single customisation has some specific parameters for the setup.

You can set the price variation of the selection for the equipment with a payment system.

ADVANCED ESPRESSO PARAMETERS

INITIAL DELAY

To set up a delay for the ingredient; the delay is useful if you create a recipe consisting of several ingredients.

For example, on creating the recipe “Espresso with milk”, you can set up a delay time between the espresso dispensing cycle and the milk one.

It may be of use to obtain a better drink appearance.

DOSE SQUEEZING

The dose is squeezed by the upper piston that helps removing water from the dose before discharge in the solid waste tray by mechanically compressing the dose.

- ON: dose squeezing enabled
- OFF: no dose squeezing

SQUEEZE DOWN FORCE

to set up the dose squeezing force the piston may exert at the end of dispensing.

SQUEEZE REST FORCE

to set up the safety value of the dose squeezing force.

⚠ This value must be higher than or equal to the “squeeze down force” value.

PRE-BREW DOSE

To set up the water quantity (in ml) for use during pre-brewing.

PRE-BREW TIME

To set up the pre-brew time before actual brewing occurs.

EXTRACTION PRESSURE

To set up 3 pressure profiles for espresso brewing:

- High
- Medium
- Low

Set up low to display the parameters for low-pressure brewing (see fresh brew parameters).

ADVANCED INSTANT PARAMETERS

INITIAL DELAY

To set up a delay for the ingredient; the delay is useful if you create a recipe consisting of several ingredients.

For example, on creating the recipe “Chocolate with milk”, you can set up a delay time between the chocolate dispensing cycle and the milk one.

It may be of use to obtain a better drink appearance.

MIXER DELAY

To set up a delay time for starting the mixer compared to the water dispensing cycle.

MIXER ABSOLUTE MIX TIME

You can set up the mix time, not depending upon the time necessary to operate the pump / valve.

The mix time value is set in tenths of a second and calculated from the time the pump / solenoid valve is started up.

RELATIVE MIXER TIME

You can set up the mix time by way of difference, either in excess or in default, compared to the stop time of the pump / solenoid valve.

The mix time value is set in milliseconds and calculated from the time the pump / valve is started up.

MIX SPEED (LOW / MEDIUM / HIGH)

You can define the mix speed according to the appearance you wish for the product.

WATER QUEUE

To extend the water dispensing cycle in the mixer at the end of mixing to rinse the mixer properly.

Set up the water quantity you wish.

POWDER SPEED

To set up the working speed of the ingredient motor to define its capacity.

POWDER DELAY

To set up a delay time for dispensing instant powder compared to the water dispensing cycle in the mixer (activation of the pump / solenoid valve).

STEP

Instant powder is dispensed at intervals while water is being dispensed.

Set up in how many intervals to dispense instant powder while water is being dispensed.

Set up the intervals (steps) according to the powder used to obtain a good-looking quality drink.

DECAFF CYCLE

Instant powder is dispensed before water to improve the drink appearance.

Enabling is recommended for instant coffee.

CANISTERS

It displays the arrangement of product canisters, according to the machine layout.

Choose a canister to:

- Assign a name to the canister
- Associate an ingredient to the canister (Chocolate, Espresso, Espresso 2, …)
- Set up the maximum canister capacity to manage the “ending product” control.
- Change the colour associated with the canister.

MECHANICAL LAYOUT

It represents the mechanical layout of the configuration used by the equipment.

It represents the arrangement of canisters and the main functional units.

You can specify the new mechanical settings on the equipment for the software.

Make sure that the settings you have made correspond to the actual configuration of the equipment.

The equipment regulates the operation cycles of functional units according to the choices you have made.

The settings not in compliance with the actual configuration may be a source of danger and damage the equipment.

ID PRODUCTS

To modify the identification number of snack and food selections.

To display all snack and food selections with the relative identification number.

No identification number of snack and food selections is admitted if duplicated; if the value is duplicated, the equipment will display a message.

MACHINE SETTINGS

CONFIGURATION

SELECT CONFIGURATION

To manage groups of configurations (e.g. by country) and every single configuration (layout) arranged for the equipment.

One group of configurations contains several single configurations (layout)

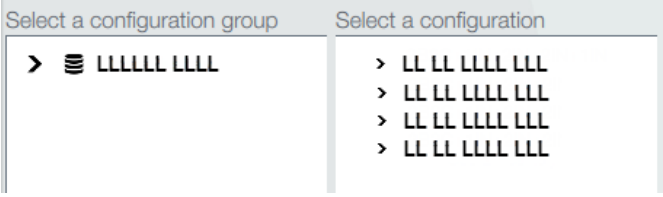

Fig. 37

You can remove and duplicate the groups of configurations and every single configuration.

When you use a new configuration, you can decide whether to reset statistical data, calibrations and maintenance counters.

ⓘ Before loading the configuration of another equipment (cloning), check the mechanical and software compatibility of the equipment.

To use another configuration (by default), load it from the function “Backup and restore”.

To display the configuration by default you have loaded, enable the parameter “display all” from the function intended to select the configuration.

BACKUP AND RESTORE

The backup function is intended to save the current machine settings in a backup.

The backups are saved in the memory of the CPU board.

The restore function is intended to restore the machine settings from the backup you have made before.

The equipment can be restored to the:

- settings by default
- customised settings you have saved before by using the backup function.

After restoring the settings from the configuration file, enable the configuration from the menu “Select configuration”.

IMPORT FROM USB

To import new machine settings from a configuration file saved in a USB stick.

ⓘ Import can be used to clone the settings of another equipment; check the compatibility of settings among the equipment.

EXPORT ON USB

To export the machine settings into a configuration file on a USB stick.

ⓘ Export can be used to clone the current settings of another equipment; check the compatibility of settings among the equipment.

MODIFY INTERFACE STRINGS

To modify the names of drinks, recipes, canisters, nutritional information ... displayed on the screen pages and in the languages made available.

The equipment groups the various strings by category to facilitate the identification thereof.

ⓘ It is not possible to modify the strings of programming menus.

CUSTOMISE USER'S INTERFACE

MODIFY

To set up some graphical items of the user interface (GUI), e.g., backgrounds, text dimensions, colours, …

SELECT CUSTOMISED GRAPHICS

To choose the file with the graphical customisations to apply to the user's interface.

To display the files loaded by using the function "import".

IMPORT CUSTOMISED GRAPHICS

To import with file with the graphical customisations from a USB stick to the equipment.

EXPORT CUSTOMISED GRAPHICS

To save a file with the graphical customisations on a USB stick.

GENERAL DISPLAY SETTINGS

To enable / disable the display of:

- the number of dispensing cycles performed after the equipment has been powered on.
- set up the touch screen luminosity; 100 is the value for maximum luminosity.
- date and time
- screen saver, enable to enter after how long to activate the screen saver. Choose whether to reproduce a screen saver or a *playlist*

PLAYLIST

To create and manage *playlists* of entertainment contents.

A *playlist* includes videos and/or sequences of images reproduced while the selection is being dispensed.

Press + to add videos or images to the *playlist*.

Press to create a copy of the *playlist*.

Press to remove the *playlist*.

A new *playlist* must be necessarily assigned a name.

The contents of the *playlist* can be reproduced: random or cyclically

ⓘ For a *playlist* consisting of images only, you can specify after how long (in seconds) to display the next image.

TEXT MESSAGE AND FEED RSS

You can display rss feed (news) and weather forecasts in normal operation mode and while the selection is being dispensed.

Please connect the equipment with the Internet to display news and weather forecasts.

FEED / TEXT

The equipment is set up by default to display fixed text messages (equipment not Internet-connected).

Create and enter the texts you wish to shown in normal operation mode.

Enable the network connection to display news by using a FEED RSS.

ⓘ A FEED RSS is intended to display short news during normal operation.

Choose the FEED RSS address among those pre-defined or enter a customised address.

SETTINGS OF INPUT SENSORS

The group of functions is intended to set up the operation of some sensors of the equipment.

LEVEL OF CANISTERS

To enable / disable the control of the level of canisters.

ⓘ The level of canisters is calculated. The product quantity used in the recipe is subtracted from the canister capacity for each selection you have made.

ⓘ For a correct management specify the product quantity you have loaded in the canister (whenever you load products).

To display the various canisters with filling levels and modifiable parameters:

- Calculated quantity: enable the counter managing the pre-alarms of “ending product”
- Total capacity: set up the grams of the maximum canister capacity
- Threshold value: set up the grams of the pre-alarm threshold

CUP SENSOR

Models with “cup sensor” only (photocell).

The cup sensor can be enabled / disabled for all selections.

Moreover, you can establish whether - after two attempts at releasing the cup and if the photocell
has detected no object in the dispensing compartment - the failure shall:

- lock the machine (locking failure)

or

- let it run for operation with the user’s cup (non-locking failure).

CALIBRATIONS

VOLUMETRIC COUNTER CALIBRATION

The calibration of the volumetric counter (flow meter) enables the operator to obtain the proper water quantity required by recipes.

The calibration procedure of the volumetric counter consists in:

1. Dispensing and drawing the pre-set water quantity
2. Measuring the dispensed water quantity (in cc)
3. Enter the measured value.

GRINDING CALIBRATION

Calibration enables the user to regulate the working speed of the grinder, according to the grams to be ground.

To calibrate, act as follows:

1. After the calibration procedure has been started, a coffee dose in beans is ground and released.
2. Weigh the ground product
3. Enter the value of the weight you have measured.

INGREDIENT MOTOR CALIBRATION

The calibration of instant product and pre-ground coffee ingredient motors enables the user to regulate the working speed of the ingredient motor to define the flow rate in gr/sec.

To calibrate, act as follows:

1. Dispense powder at the minimum speed.
2. Weigh the instant powder you have dispensed.
3. Enter the value of the weight you have measured.
4. Dispense powder at the maximum speed.
5. Weigh the instant powder you have dispensed.
6. Enter the value of the weight you have measured.

CALIBRATION OF PUMPS / SOLENOID VALVES

Calibration enables the user to regulate the flow rate in cc/sec.

To calibrate, act as follows:

1. Dispense water at the minimum flow rate.
2. Measure and enter the dispensed water quantity.
3. Dispense water at the maximum flow rate.
4. Measure and enter the dispensed water quantity.

COLD WATER CALIBRATION

For models dispensing cold water only.

The cold water calibration enables the operator to obtain the proper water quantity in recipes.

The calibration procedure:

1. Dispense a pre-set water quantity
2. Measure the dispensed water quantity (in ml)
3. Enter the measured value.

AUTOMATIC REGULATION OF GRINDING WHEELS

For each device for the regulation of grinding wheels (if any), you can:

- Enable / disable the automatic grinding regulation
- Set up the brew time, i.e. the time you wish to dispense the water dose of reference set up (brew dose).
- Set up the water quantity of reference (brew dose), on the basis of which to monitor the brew time.

If you change the brew dose, the brew time is changed proportionally.

If you change the brew time, the brew dose is not changed.

MOTOR-DRIVEN REGULATION OF GRINDING WHEELS

If the grinding regulation is disabled or in the equipment, where the regulation of grinding wheels is motor-driven, you can regulate grinding (coarse or finer).

Set up the value (expressed in 1/6 of a turn of the grinding wheel ring nut) to bring the grinding wheels closer or to move them farther.

When grinding wheels are brought closer, grinding is finer.

When grinding wheels are moved farther, grinding is coarser.

Act manually on the regulation knob of the grinder for the machines where the regulation of grinding wheels is not motor-driven.

OUTPUT SETTINGS

BREW UNIT

- No coffee: a sensor is intended to detect the grinder rotation during grinding; in case of a lock (e.g. foreign bodies) or if the speed is too high (grinder empty), the control will lock the selections using the grinder.
- Pre-grinding: to enable / disable coffee grinding for the next selection. Pre-grinding decreases the time necessary to prepare the next selection with ground coffee. Pre-grinding compromises the flavour of the next selection with ground coffee.
- To set up the position of the brewing chamber of the brew unit.
  Setting up the position of the brewing chamber enables the coffee powder to spread more homogeneously in the brewing chamber.
- It enables the brew unit to re-position as soon as the equipment is powered on.
  If the brew unit is re-positioned, you can be sure that it has reached its correct position before dispensing.
- It enables the dose variation of the first coffee (increase in the water dose of the first coffee)

PARAMETERS OF FAN WHEELS

To enable / disable the operation of the fan wheels in the equipment.

VAPOUR SUCTION

- ON: the fan wheel is always active.
- OFF: The fan wheel becomes active during the preparation of the drink.

LIGHTING

To set up the lighting parameters of the equipment.

you can set up:

- if the lighting of the equipment must remain on or off when the equipment is out of order.
- decide how long to leave the lighting of the compartment on after the end of dispensing.

TEA BREW UNIT

For models with tea brew unit only.

"SERVICE" POSITION OF THE TEA BREWER

To put the tea brew unit in the "service" position.

The "service" position is useful to carry out operations requiring the operator to disassemble the tea brew unit from the equipment.

TEA BREWER ASSEMBLED AFTER CLEANING

To reset the counters intended to manage the message prompting the operator to "clean the tea brewer"

Confirm after sanitising and remounting the tea brewer in the equipment

SETTINGS OF THE CUP DISPENSER

Use this function to determine:

- the delay time for stopping the rotation of the cup stacker
- the time that must elapse from when the cup release motor is activated till when the cup is acknowledged by the cup sensor

Use these parameters to balance any inertia due to the type of cup.

SETTINGS OF MOBILE NOZZLES

Use this function to determine:

- the position of mobile nozzles to dispense hot or cold water only.
  The position of nozzles is expressed as a percentage of the time nozzles require to reach their dispensing position.
- set up after how long to move the nozzles back to their stand-by position after a dispensing cycle.
  The delay time enables the tubes to get empty and to drip in the cup.

The customised position of nozzles enables the operator to avoid any contamination of a water-only selection.

Check the settings you have made by experimentation.

MAINTENANCE

PROGRAMMING AUTOMATIC WASH / RINSE CYCLES

You can enable / disable the programming of automatic wash and/or rinse cycles of the equipment.

Programme the type of wash and/or rinse cycle to be performed on the day and at the time you have set up.

You can add and remove automatic wash and/or rinse cycles.

⚠ Automatic wash / rinse cycles use hot water. Never put your hands in the dispensing area: danger of burns.

ⓘ Wash cycles are not intended to replace the necessity to disassemble the components for sanitising purposes regularly.

A message is displayed during wash / rinse cycles to show the progress of the operation.

NEXT MAINTENANCE

Enable and set up the maintenance interval and/or number of dispensing cycles.

As soon as one of the set up values is reached, the equipment shows the message “maintain”.

NOTICE OF MAINTENANCE

To reset the counter managing the notices of maintenance.

ⓘ To manage notices properly, reset the counter only after carrying out all maintenance operations.

MESSAGES FOR WASH CYCLES

Set up the intervals (number of hours and/ or selections) for each type of wash / rinse cycle.

As soon as one of the set up values is reached, the equipment shows a message prompting the operator to wash / rinse.

Every single wash / rinse cycle may be made compulsory: the equipment or some functional units are put out of order until the wash / rinse cycle is carried out.

NEXT WASH CYCLES

It displays for each type of wash / rinse cycle when a wash / rinse cycle must be carried out.

GENERAL SETTINGS

POWER SUPPLY

To set up the power supply voltage used to supply the equipment.

Check the value of the power supply voltage before making your choice.

ⓘ The set up enables the user to manage all electric components properly and to optimise the operation cycles of the equipment

TANK

The machine can be supplied with water from the network (OFF) or from a tank (ON).

HYDRAULIC CIRCUIT

To set up the hydraulic circuit of the equipment (standard or with double boiler).

Make sure that the circuit you have chosen is the one of the equipment

ⓘ The set up enables the user to manage all electric components properly and to optimise the heat cycles of the boiler/s

BOILER PARAMETERS

To set up the operation parameters of the boiler/s.

- Temperature: to set up the operation temperature of the boiler

You can enable a heat cycle of the boiler (boost) at the first selection and after a stand-by period

Enabling a heat cycle (boost) is of use to balance a low temperature of the first selection (after a stand-by period).

You can enable the boost even for all the next coffee-based selections.

For instant drinks, the heat cycle of the boiler (boost) is for the first selection only.

PRE-DISPENSING SETTINGS

To enable and manage the heat and/or rinse cycles before dispensing.

If these cycles are enabled, the time required to prepare drinks becomes longer.

MASTER SLAVE SETTINGS

Use this function to enable the “Master / Slave” connection.

If the function is active, the equipment is “Master”: it controls the second machine.

The “Master / Slave” connection requires the equipment to be connected with each other by means of a special kit.

From the menu set up the model of the “Slave” machine.

The master/slave function is not enabled by default.

If the “Master / Slave” function is enabled, you can use the functions relative to snack and/or food products (e.g. arrangement of snack selections).

The request for snack and/or food selections is made by the “Master” equipment.

MACHINE INFORMATION

FAILURES

The machine is equipped with several sensors intended to control the various functional units.

As soon as a malfunction is found out, the type of failure is displayed and the machine (or part of it) is set out of order.

The failures that are found out are stored in special counters.

FAILURE HISTORY FILE

Use this function to display the failure history file. The history file shows the failure with the corresponding date and time.

The function shows if the failure is still present and/or solved.

From the function you can reset the list of recorded failures.

EVENT HISTORY FILE

Use this function to display and filter the events recorded by the equipment.

An event might be for example the access to menus, the change of parameters, …

From the function you can reset the list of recorded events.

FAULTS

It displays the faults on the equipment.

If there is no fault, the list is blank

DOSER FAULT 1...9

If the current input of an ingredient motor falls outside the range of pre-set values, all the selections using that doser will be disabled.

MIXER FAULT 1...6

If the current input of a whipper motor falls outside the range of pre-set values, all the selections using that mixer will be disabled.

SOLENOID VALVE 1...7

If the current input of a solenoid valve falls outside the range of pre-set values, all the selections using that solenoid valve will be disabled.

SHORT CIRCUIT MOSFET

One of the mosfets on the actuation board remains active.

The mosfets control the activation/deactivation of direct current motors

SHORT CIRCUIT

A short-circuit is detected on one of the direct current motors connected with the actuation board.

A fault may be simultaneously detected on one of the direct current motors.

VOLUMETRIC COUNTER

The volumetric counter (flow meter) enables the operator to count the water quantity necessary to prepare a selection.

If the actuation board fails to detect the volumetric counter pulses produced by the water passage within a pre-established time interval, the equipment is put out of order.

AIRBREAK WATER LOSS

The air-break micro (operated by the float) signals the lack of water even if no request has been made for a selection.

The water inlet solenoid valve is opened or the self-supply pump activated (attempt at filling the air break).

If the air break is not filled, the equipment is set out of order.

AIRBREAK MICRO

The air-break micro (operated by the float) never signals the lack of water following a dispensing cycle.

AIR-BREAK FILLING TIMEOUT

The air-break micro (operated by the float) is not signalling that the water level has been reached in the air-break within the pre-set time interval during filling.

BOILER FILLING TIMEOUT

The boiler has not filled within the pre-set time interval.
The water quantity necessary to fill the boiler is detected by the volumetric counter (flow meter).

COFFEE UNIT - MICRO UNIT FAILURE -

While the brew unit is being operated, the control micro is not operated within a certain time limit.
This failure may be associated with another positioning failure of the coffee unit.

COFFEE UNIT - START UNIT FAILURE -

The microswitch signals the coffee unit has not moved from the stand-by position.

COFFEE UNIT - BREW UNIT FAILURE -

The control micro signals that the coffee unit has not reached the brew position.

COFFEE UNIT - DISPENSING UNIT FAILURE -

During the brew phase, the control micro signals that the espresso unit is being handled.

COFFEE UNIT - DISCHARGE UNIT FAILURE -

At the end of the brewing phase, the control micro signals that the coffee unit has not reached the "used dose discharge" position.

COFFEE UNIT - STANDBY UNIT FAILURE -

The control micro signals that the brew unit has not moved back to the stand-by position after having discharged the coffee dose.

MOBILE NOZZLES

Mobile nozzles have failed to reach the dispensing position.

The equipment is put out of order.

BOILER ERROR

The boiler fails to reach the operation temperature after temperature values have been measured many times within a well-defined time interval.

The equipment is put out of order.

BOILER LEAKAGE

It signals any pressure loss of the boiler during the “pressurising” cycle.

COMPLETE MACHINE CLEANING

It signals that the equipment must be completely cleaned.

The signal is displayed when the time limit or the pre-set number of selections is reached.

MIXER WASH

It signals that the mixers must be washed.

The signal is displayed when the time limit or the pre-set number of selections is reached.

COIN MECHANISM

Models with payment system only.

The machine stops if it should receive an over 2-sec. pulse on a validator line or if the communication with the serial coin mechanism is not longer than 30 seconds (Executive protocol) or 75 seconds (BDV protocol).

NO WATER

Lack of water in the water network or self-supply tank.

Make sure that the equipment is connected with the water network and that the cock is open or that the tank is full of water.

Touch the “Reset” key to restore the operation of the equipment.

NO COFFEE

If the ground dose is not reached in the doser within 15 seconds, the "no coffee" failure is recorded.

The selections using coffee beans are put out of order.

GRINDER LOCK

A sensor detects the actual rotation of the grinder during the grinding time.

In case of lock (foreign bodies, etc.), the grinder is locked and espresso-based selections are disabled.

MACHINE BOARD

Lack of communication between the machine board and the CPU board.

The communication between the two boards occurs through CAN BUS.

Check the CAN BUS connections between the two boards.

LOW ESPRESSO TEMPERATURE

The temperature of the espresso boiler is lower than the minimum temperature programmed for a dispensing cycle.

Wait for the minimum temperature set up for dispensing to be reached.

MACHINE DATABASE NOT AVAILABLE

The machine database intended to group and manage the machine configurations (layout) is not available in the equipment or it can’t be loaded or created.

Make sure that the memory space is enough.

The equipment is put out of order.

STATISTICS

SHOW STATISTICS

It displays the statistics relative to selections (e.g. the number of dispensing cycles carried out, date and time of the last dispensing cycle, …)

RESET STATISTICS

It resets the statistics stored for selections.

SHOW AUDITS

It displays the total number of dispensing cycles and the total number of dispensing cycles after the last statistics reset as well as the amount collected for every single selection.

The function enables the operator to filter the display of audit data by category.

NUMBERING OF SELECTIONS

To number the selections and have a drink - selection number match in the statistics.

ⓘ Every single selection must have a univocal number.

FAVOURITES

The favourites are links with the functions frequently used.

After adding a function to your “favourites”, you just have to display the “favourites” and touch the function for rapid access.

LIST OF FAVOURITES

It displays all the functions that are frequently used and that have been stored as “favourites”

Touch the function for access.

DELETE LIST OF FAVOURITES

To remove the functions that have been stored as “favourites” .

You can remove one single function or all functions (delete all).

To remove one single function: touch the function key and confirm the removal from the list.

MACHINE IDENTIFICATION NUMBER

To enter a numeric code and the name intended to identify the equipment.

The code can be used to identify the equipment to analyse statistics.

ⓘ This information is not saved when a complete backup is carried out.

INSTALLATION DATE

To set up the installation date of the equipment.

Press ✎ to set up the date.

ⓘ The date is used to manage and schedule maintenance intervals and/or automatic wash / rinse cycles.

TECHNICAL SUPPORT CONTACTS

To enter the technical support details (name and phone number) for contact in case of malfunction.

This information will be displayed in case of malfunction.

You can decide whether to display the information with the failures locking the equipment or with the failures not locking the equipment or with the failures that can not be reset in normal operation mode.

Press ✎ to modify contact details.

ENERGY SAVING

You can enable, modify the parameters and set up the energy saving time bands for the equipment from the energy saving function.

SETTINGS

To enable / disable the energy saving functionality.

The equipment enables the operator to manage various energy saving profiles.

Some parameters of every single energy saving profile can be customised.

"SOFT MODE" PROFILE

This profile enables energy saving after a shut-down period of the equipment.
Upon request for a selection, the machine quits the energy saving mode.

You can:

- Set up after how many minutes of shut-down energy saving is activated for the equipment.
- set up the holding temperature of the boiler/s in the energy saving phase
- enable / disable the lighting of the equipment
- choose the luminosity level of the touch screen among those pre-defined.

"DEEP MODE" PROFILE

This profile is active on the time bands you have set up.

The boiler temperature is lowered in the set up time bands and the set up holding temperature is kept.

You can:

- set up how many minutes earlier the boiler must be heated before the end of the time band.
  For instance 5 minutes: the heat cycle of the boiler is activated 5 minutes before the end of the time band to reach the operating temperature.
- set up the holding temperature of the boiler/s in the energy saving phase
- enable / disable the lighting of the equipment
- choose the luminosity level of the touch screen among those pre-defined.

TIME BANDS

To set up the time bands intended to trigger energy saving profiles.

- Choose the day on which to set up the time bands.
- Touch “Add” and then the profile line to position a rectangle showing the time.
- Drag the rectangle to define the time exactly.

To remove a rectangle, touch the key “Remove” and then the rectangle to be removed.

You can copy the settings for all days of the week or for one single day.

Touch “Copy day profile” to:

- Copy the set up time bands for one single day of the week; touch the day on which to set up the energy saving and then touch “paste daily profile”
- Copy the set up time bands for all days of the week; touch “paste daily profile to all days”

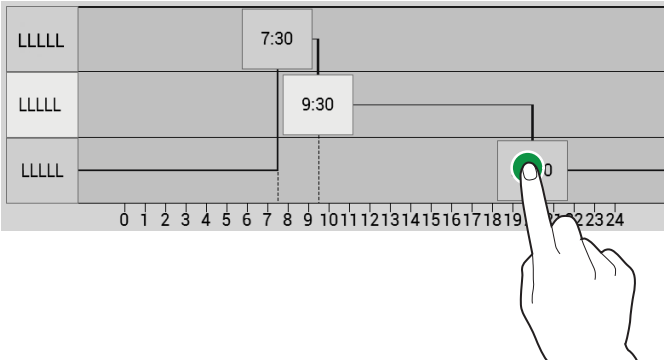

Fig. 38

PAYMENT SYSTEMS

You can decide which protocols to enable for the payment systems available and manage the relative functions..

Some parameters shared by several payment systems keep the set point even if you change the type of system.

COMMON PARAMETERS

IMMEDIATE CHANGE

The amount relative to a selection is generally cashed after the machine has sent the “Successful selection” signal.

If you enable this function, which is disabled by default, the cash signal is sent at the start of the dispensing cycle.

DECIMAL POINT POSITION

To set up the decimal point position, i.e.:

0: decimal point disabled

1: XXX.X (one decimal digit after the point)

2: XX.XX (two decimal digits after the point)

3: X.XXX (three decimal digits after the point)

TYPE OF DISPENSING.

To set the operation mode by multiple or single dispensing. In case of multiple dispensing, the change is not automatically given at the end of a successful delivery, but the credit will remain available for further dispensing. If you press the coin return button, the remaining credit will be returned if its value is lower than the maximum change value.

OBLIGATION TO BUY

To enable/disable the operation of the coin return button before dispensing a product.

- ON: the change is returned after having selected a product
- OFF: the change is returned just after having pressed the coin return key (the machine is acting as a coin changer)

VALIDATOR

DECIMAL POINT POSITION

To set up the decimal point position, i.e.:

0: decimal point disabled

1: one decimal digit after the point (XXX.X)

2: two decimal digits after the point (XX.XX)

3: three decimal digits after the point (X.XXX)

CREDIT (OVERPAY)

You can decide whether:

- to cash any credit exceeding the selection amount after a well-defined time interval
- keep and leave any credit exceeding the selection amount for the next selection.

OVERPAY TIMEOUT

To set up after how long to release or cash the credit with no request for a selection.

VALUE OF VALIDATOR LINES

To set up the value of the 6 validator coin lines (from A to F).

EXECUTIVE

RELEASE

You have to choose among the following payment systems for the Executive system:

- Standard
- Price holding / price display.
- Price holding with alignment

SYNCHRONISE PRICES

Price holding / price display and Price holding with alignment enables the operator to synchronise the prices set up:

- from the coin mechanism to the equipment and viceversa.
- from the coin mechanism / cashless system to the equipment and viceversa.

Synchronisation occurs whenever the equipment is powered on.

DISPENSING WHEN INSUFFICIENT CREDIT

If enabled, you can dispense selections (for 3 minutes) even if the credit you have inserted is not enough.

It is disabled automatically 3 minutes after the function ‘dispensing with insufficient credit’ has been activated.

MDB

CREDIT (OVERPAY)

You can decide whether:

- to cash any credit exceeding the selection amount after a well-defined time interval
- keep and leave any credit exceeding the selection amount for the next selection.

OVERPAY TIMEOUT

To set up after how long to release or cash the credit with no request for a selection.

MAXIMUM CREDIT

To set up the maximum accepted value (cash) to avoid returning a high change.

MAXIMUM CHANGE

You can set a limit on the total amount of the change the coin mechanism will return as soon as you press the change button or after one single dispensing.

ⓘ The credit exceeding the amount you have programmed by this function will be cashed.

COINS ACCEPTED

To define which coins shall be accepted among those recognised by the validator when the change tubes are full.

For the coin/value correspondence check the coin mechanism configuration.

COINS ACCEPTED FOR EXACT CHANGE

To define which coins shall be accepted among those recognised by the validator when the machine is in the “exact amount” mode.

For the coin/value correspondence check the coin mechanism configuration.

COINS RETURNED

To define which coins shall be used to give the change among those available in the tubes. This parameter is active only with the coin mechanisms not intended to manage the choice of the tube in use automatically (Auto changer payout).

For the coin/value correspondence check the coin mechanism configuration.

EXACT CHANGE ALGORITHM

To choose the control algorithm to enable the machine to give the change at the end of the selection.

Every single algorithm checks a series of requirements (the amount of coins in the tubes or the empty or full state) of the tubes the coin mechanism will use to give the change.

The "No change" condition occurs when the tubes assigned to the chosen algorithm have achieved the minimum level of coins.

For reasons of simplicity, the combination is described with reference to tubes A, B and C, where tube A will receive the lowest-value coins and tube C the highest-value coins.

0	=	A or (B and C)
1	=	A and B and C
2	=	A and B only
3	=	A and (B or C)
4	=	A only
5	=	A or B only (default)
6	=	A or B or C
7	=	A or B only
8	=	A or C only
9	=	B and C only
10	=	B only
11	=	B or C only
12	=	C only

For example: if the algorithm is set to “6”, the machine will display the "No change" message when one of the tubes (A, B, C) has achieved the minimum level.

If the algorithm is set to “04”, the machine will display the “No change” message only when tube A (lower-value coin) has achieved the minimum level of coins.

CASHLESS SETTINGS

CASHLESS PRIVATE

To protect the users' privacy, this function is intended to display "-----" in the place of the credit on the cashless system.

NON-DEFINED CREDIT ACCEPTANCE

This function is intended to accept cashless payment systems (key or card) or not if the cashless system credit is not defined.

CASH-SALE CONTROLS

It enables / disables the cash-sale function.

To give evidence that cash transactions have occurred by means of a cashless system.

The values available are listed here below:

- 0: cash transactions are recorded as such (standard operation)
- 1: cash transactions are recorded as transactions performed by the first cashless system
- 2: cash transactions are recorded as transactions performed by the second cashless system

REVALUE

To enable / disable the bill reader only to recharge the credit on the cashless system (key or card).

SECOND CASHLESS

To enable / disable the operation of a second cashless system.

BILL VALIDATOR

CASHLESS RECHARGE WITH BILLS

To enable / disable the possibility of recharging cashless systems (key or card) by means of a validator or bill reader.

BILLS ACCEPTED

To define which bills shall be accepted among those recognised by the reader.

For the bill/value correspondence check the reader configuration.

BILLS ACCEPTED FOR EXACT CHANGE

To define which bills shall be accepted among those recognised by the reader when the machine is in the "exact amount" mode.

For the bill/value correspondence check the reader configuration.

PRICES

CURRENCY SYMBOL

The function is used to set up the currency symbol during the credit and price display.

SALES PRICES

The machine can manage up to 4 different prices for each selection (according to the payment method).

Prices can be active according to the (standard or promotional) time band you have set up.

Prices are grouped into 4 lists.

For each one of the 4 lists, you can set up the price globally (the same price for all selections) and individually (for every single selection).

FREE VEND PASSWORD

To enable / disable the free dispensing cycle of one or more than one selection by means of a password.

Set up:

- the password for one single free dispensing cycle

or

- the password for the free dispensing cycle of several selections.

PRICE BY TIME BAND

To set up the (standard or promotional) time bands for the sale at differentiated prices.

- Touch the day on which to set up the time bands.
- Touch “Add” and then the time band line to position a rectangle showing the time.
- Drag the rectangle to define the time exactly.

To remove a rectangle, touch the key “Remove” and then the rectangle to be removed.

You can copy the settings for all days of the week or for one single day.

Touch “Copy day” to:

- Copy the set up time bands for one single day of the week; touch the day on which to set up the energy saving and then touch “paste day”
- Copy the set up time bands for all days of the week; touch “paste for all days”

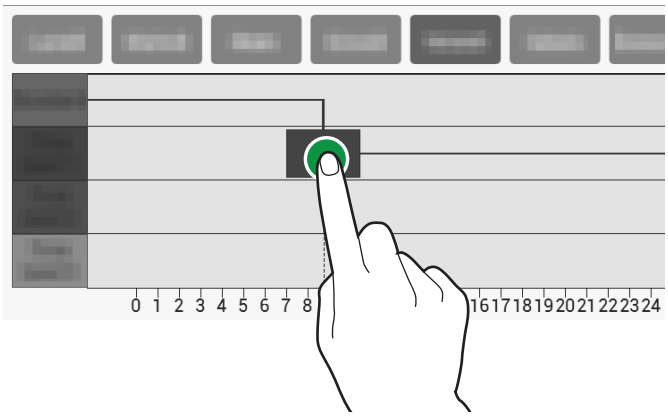

Fig. 39

EMPTY COIN MECHANISM

To empty the coin mechanism and get the whole amount cashed.

IMPORT / EXPORT

It groups all the functions used to export and import statistics, machine settings, graphical packages, …

EVADTS

To export EVADTS data on a USB stick and/or on data transmission devices (RS232, IrDA, telemetry, …).

USB

To save an EVADTS file on a usb stick.

SERIAL COMMUNICATION PROTOCOL

Use this function to decide which communication protocol to use for communication with data acquisition devices.

DDCMP - EDDCMP

with the following configurable parameters:

- **Baudrate**: it is the transmission speed to be used for communication between the equipment and data acquisition devices.
- **Pass code**: it is a code that shall be the same as the one of the data transfer terminal for identification.
  Set to 0 by default
- **Security code**: it is a code for mutual recognition between machine and EVA DTS terminal.
  Set to 0 by default
- **End-of-transmission**: if enabled, it can recognise the end-of-transmission (EOT) signal sent to the last package and interrupt data communication.

DEX/UCS

with the following configurable parameters:

- **Baudrate**: it is the transmission speed to be used for communication between the equipment and data acquisition devices.

VIDEO

To import / export videos from the equipment by means of a USB stick.

SUPPORTED VIDEO FORMATS

- MP4 coding H264 and 25 frames/sec
- AVI coding XVID, MPEG2 and 25 frames/sec
- MOV coding MPEG4 and 25 frames/sec
- maximum screen saver resolution 800x1200
- entertainment video resolution 640x480.

ⓘ The use of high-quality contents affects the general performances of the equipment and occupies memory space.

⚠ Video reproduction might require the consent by the holder of the copyright or other content-related rights.

Make sure that the copyright regulation applicable for the country of installation of the equipment is observed.

IMAGES

To import / export images from the equipment by means of a USB stick.

SUPPORTED IMAGE FORMATS

- JPG, PNG

ⓘ The use of high-quality contents affects the general performances of the equipment and occupies memory space.

⚠ Image reproduction might require the consent by the holder of the copyright or other content-related rights.

Make sure that the copyright regulation applicable for the country of installation of the equipment is observed.

BACKUP

To export / import a complete backup of the equipment settings on a USB stick.

The backup is intended to save the configuration groups (with the relative layouts), the user interface customisations, the videos and images used for playlists and prices.

ⓘ The machine parameters and settings can be exported and used on other equipment or after an update of the application software.

Statistical data, network and email settings, the name of the machine, the installation date,… are not saved.

ERROR LOGFILE

Export the machine errors in a logfile.

Saving occurs on a USB stick.

SYSTEM

EXPORT MENU TREE

To export a text file of the menu tree of the software functions of the equipment on a USB stick.

DISPLAY LOG FILES

To display the log file.

The log file is the sequential and chronological recording of the operations carried out by the equipment step by step.

The recording of events in the log file is enabled from the “advanced functionalities” of the “development” menu.

EXPORT LOG FILES

To export the log file on a USB stick.

The log file is the sequential and chronological recording of the operations carried out by the equipment step by step.

The recording of events in the log file is enabled from the “advanced functionalities” of the “development” menu.

SYSTEM INFORMATION

It is intended to supply the main system information, such as the memory space used and made available, …

IMPORT / EXPORT THE TRANSLATIONS OF STRINGS

To import / export the translations of the user interface strings by means of a USB stick.

EXPORT THE SETTINGS OF RECIPES

To export the settings of recipes on a USB stick.

ADVANCED FUNCTIONALITIES

To enable advanced functionalities to diagnose any malfunction of the application and/or operating system.

If activated, these functionalities slow down the operation of the equipment.

TESTING OF COMPONENTS

To test the main components of the equipment.

To display the components that can be tested.

Choose the component you wish to test.

BREW UNIT

The handling of the brew unit is started

ESPRESSO CANISTER

A dose of coffee beans is ground

CUP RELEASE

A cup is released

STIRRER RELEASE

A stirrer is released

HANDLING OF NOZZLES

Nozzles are handled

INGREDIENT MOTORS

The instant powder ingredient motor is activated for some seconds..

MIXER

The mixer is activated for some seconds..

LIGHTING

The lighting of the equipment is activated for some seconds.

SOLENOID VALVES

The solenoid valve you have chosen is activated for some seconds.

PUMPS

The pump you have chosen is activated for some seconds.

⚠ Hot water is dispensed during tests: never put your hands in the dispensing area

TEST OF SENSORS AND INPUT DEVICES

To display the screen page with the status of the control devices of the equipment (probes, microswitch,…).

The functions is of use for a general overview of the various sensors of the machine.

For ON/OFF devices, the status is shown to be green if the device is active / operated and red if not active / not operated.

The measured value (e.g. temperature) is displayed for sensors.

TEST OF OUTPUT DEVICES

To check the operation of various components of the equipment.

To display the components that can be checked.

Choose the component you wish to test.

ⓘ The test must be carried out when the door is closed for safety reasons.

TESTING THE TOUCH SCREEN

To check the touch operation.

Touch and drag your finger on the touch screen.

Every single touch leaves a trace of different colour.

Testing enables the operator to find out any touch screen area whose sensitivity is either poor or absent.

FILLING AND EMPTYING THE BOILER

To fill and empty the boiler.

The hydraulic circuit is filled automatically.

If you have to act on the hydraulic circuit or if a considerable amount of air bubbles should be formed, fill the hydraulic circuit manually.

Empty the boiler to open a solenoid valve and let air into the boiler.

FILLING THE BOILER

The boiler is filled automatically at the time of installing the equipment.

Use the function to fill the boiler after carrying out any maintenance operation on the hydraulic installation or if a considerable amount of air bubbles is formed.

EMPTYING THE BOILER

The boiler must be emptied by technical personnel.

⚠ The boiler water is very hot and it may cause burns.

ⓘ Before emptying the boiler, wait for the water in the boiler to cool down.

A “rapid cooling” procedure is arranged for the boiler of the equipment.

Empty the boiler to open a solenoid valve and let air into the boiler.

TEST OF MACHINE PARAMETERS

To set up the time required to activate the components during the self-test.

RESTORE SETTINGS BY DEFAULT

To restore the settings by default for the equipment.

ⓘ All statistical data, lists of failures and settings are lost.

DATE AND TIME SETUP

Date and time are used to record events (e.g. failures, …), manage scheduled wash cycles and signal maintenance.

Set the current date and time

LANGUAGE

You can modify the language pre-defined to display user interface and menu messages.

Some languages are made available for the function “change language”.

To make other languages available for the function “change language”, move the flag icon to “Used languages”.

To remove a language from the function “change language”, just drag the flag icon to “Disabled languages.

USERS' PROFILES

You can enable / disable the use of some programming functions by using access profiles.

An access profile makes sure that only the profile-related functions can be used.

Ever single user profile has a password for access.

The passwords by default are:

- Technician (4444),
- Vending machine (3333),
- Filler (2222)
- User (1111)

Advanced programming functionalities must be reserved only to people having a specific knowledge of the equipment (technical personnel) and of sanitary rules.

From the function you can change the password for access to each user profile;.

NETWORK

Ethernet and Wi-Fi configurations vary according to the network you wish to connect the equipment with and the network protections in use.

ⓘ Apply to the local network administrator (systems engineer) to know the suitable network parameters for connection of the equipment.

The equipment can support the TCP/IP protocol.

It is not possible to enable Ethernet and Wi-Fi connections at the same time.

ETHERNET

To enable and configure the network board of the equipment.

Enable the network board to connect the equipment with the LAN network.

To display all the network parameters you can modify.

Network parameters (e.g. the IP address, …) can be:

- assigned automatically (DHCP)

or

- manually.

A DHCP server must be arranged on the network to assign network parameters automatically.

The MAC address is a univocal address assigned by the producer and intended to identify the network board of the equipment.

The MAC address can not be modified.

Wi-Fi

To enable and configure the Wi-Fi connection of the equipment.

Enable the Wi-Fi connection to connect the equipment with a Wi-Fi network.

The equipment can support the main Wi-Fi protection systems (cryptography).

Cryptography “Open” can guarantee no kind of protection.

If the Wi-Fi connection is activated, the equipment shows the Wi-Fi networks made available for connection.

Choose the name of the Wi-Fi network (SSID) for connection; if the Wi-Fi network is hidden, it is necessary to know the name (SSID) and to enter it manually.

Network parameters (e.g. the IP address, …) can be:

- assigned automatically (DHCP)

or

- manually.

A DHCP server must be arranged on the network to assign network parameters automatically.

ⓘ Protection-related parameters and the password for access to the Wi-Fi network must be set up manually.

The MAC address is a univocal address assigned by the producer and intended to identify the network board of the equipment.

The MAC address can not be modified.

BLUETOOTH

To enable and configure the Bluetooth connection and exchange data at a short distance (max. 10 metres) between the equipment and other devices.

To connect with a Bluetooth device, please:

- enter the identification number of the equipment.
- make the equipment identifiable during the search for Bluetooth devices.
  A wireless signal is sent to help other devices detect the equipment.
- enter the authentication code to associate the Bluetooth device.

When a device is identifiable, the association mode is also generally active.

Associated devices are shown.

FIREWALL

To increase the protection of the equipment against any undesirable access when network-connected.
It is recommended to enable the firewall.

SOFTWARE UPDATE

To display the software release of the application.

To update the application software by means of a USB stick.

UPDATE FROM USB

To update the software of the equipment by using a USB stick.

- insert the USB stick with the new application software.
- navigate in the file system of the USB stick and select the folder including the application software.

INFORMATION

To display all the information on the software of the equipment (release, graphic theme in use, machine configuration, …)

CONNECTIVITY

EMAIL SETTINGS

The equipment can send notices of events and failures (by email).

ⓘ To be able to send notices by email, please establish an active network connection.

ⓘ The equipment sends notices by email. It is impossible to receive emails on the equipment.

Enable the function to set up the parameters to send the emails and email addresses, i.e. the recipients of notices.

The parameters vary according to the email server in use (provider of email services on the Internet or email server on the LAN network).

The equipment is intended to supply a series of parameters pre-configured for the main providers of email services on the Internet.

It remains possible to manually enter email parameters for the other providers of email services on the Internet or for email servers on the LAN network (custom pre-setting).

ⓘ For the email servers on the LAN network apply to the network administrator (systems engineer) to know the suitable network parameters.

ⓘ For the providers of email services on the Internet apply to the support or to the customer care services of the provider of email services to know the email parameters in use.

You can enter and delete the email addresses to which to send notices.

After setting the parameters, you can send a test email to check the correct configuration thereof.

NOTICES OF EVENTS

Enable the events for which you wish to receive a notice (e.g. access to menus, sanitising operations,…)

NOTICES OF FAILURES

Enable the failures for which you wish to receive a notice (e.g. no coffee, no water,…)

NOTICES OF EVADTS

To schedule the sending of emails with the data in the EVADTS format.

Chapter 3
Maintenance

The intactness of the machine and its compliance with the standards of relevant installations must be checked by skilled personnel at least once a year.

ⓘ Never forget to disconnect the machine from the electric network before carrying out any maintenance operation requiring the disassembly of components.

The operations described here below must be carried out only by the personnel who have a specific knowledge of the machine operation from the point of view of electric safety and health rules.

GENERAL FOREWORD

To ensure the correct operation all over the time, the equipment must be serviced at regular intervals.

All necessary operations and the relative deadlines are listed here below. Obviously, they are merely indicative since they depend upon operating conditions (e.g. water hardness, humidity and room temperature, type of product in use, etc.).

The operations described by this chapter are not intended to exhaust all maintenance operations.

The most complex operations (e.g. boiler descaling) must be carried out by a technician having a specific knowledge of the vending machine.

In order to avoid any risk of oxidation or chemical corrosion in general, keep stainless steel surfaces well cleaned and painted by using neutral detergents (please avoid any solvent).

It is forbidden to use water jets to wash the machine.

MAIN SWITCH

When the door is open, you are not allowed to access any live part.

Only the parts protected by covers and signalled by the following symbol remain live inside the machine.

Before removing these covers, detach the power supply cable from the mains.

To power on the equipment when the door is open, just insert the key into the slot of the door switch.

You can close the door only after having removed the key from the main switch.

CONNECTIVITY SWITCH

On opening the door, a special switch will deactivate the connectivity components of the equipment.

When the door is open, the remote drives of functional units and remote control are disabled.

⚠ **All the operations requiring the machine to be directly connected to a source of electricity and the connectivity functions to be active when the door is open must be ONLY carried out by the personnel qualified and informed on the specific risks involved.**

To activate connectivity components (e.g. communication testing) when the door is open, just pull the connectivity switch pin.

If the switch is powered on and off in a tight time span, the equipment will disable connectivity components; to restore them, restart the equipment.

Fig. 40

1. Door switch
2. Connectivity switch

BREW UNIT MAINTENANCE

The brew unit must be serviced, even if slightly, every 10,000 dispensing cycles or, any way, every 6 months.

For maintenance remove the brew unit:

1. detach the coffee outlet nozzle from the unit by rotating it by 90° with respect to the connecting rod and by pulling it to the outside.
2. remove the cover from the brew unit
3. operate the lever intended to retain the unit by rotating it to reach the horizontal position.
4. remove the brew unit.

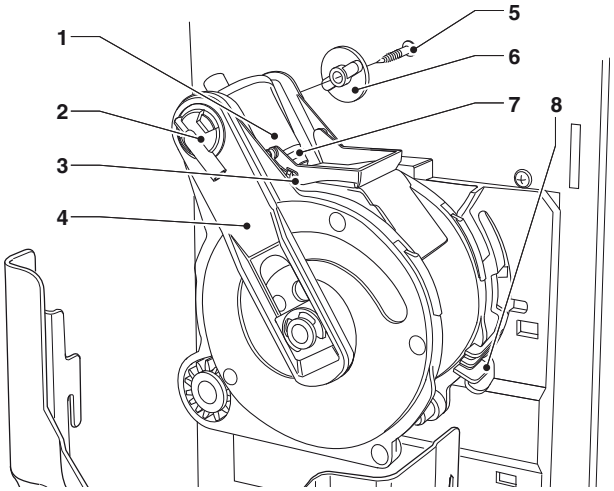

Fig. 41

1. Upper piston
2. Coffee outlet nozzle
3. Lower scraper
4. Connecting rod
5. Side screw
6. Wrench
7. Upper gasket
8. Unit retaining lever
9. Upper filter
10. Lower filter
11. Lower scraper
12. Lower piston
13. Lower gasket
14. Piston stem guide
15. Upper scraper

DISASSEMBLING / REPLACING THE UPPER FILTER AND GASKET

To disassemble or replace the upper filter and gasket, act as follows:

1. Unscrew the side screw (5) intended to fasten the wrench (6) of the upper piston.
2. Rotate the upper piston (1) upwards.
3. Remove and replace the upper gasket (7).
4. Unscrew the upper filter (9) to remove and replace it.

DISASSEMBLING / REPLACING THE LOWER FILTER AND GASKET

To disassemble or replace the lower filter and gasket, act as follows:

1. Manually bring the unit into the unload position with the lower piston up (12).
2. Unscrew the central fastening screw to remove the filter (10).
3. Press on the end of the piston rod guide (14) to get an extra-travel of the lower piston (12).
4. Use a small screwdriver to extract the lower piston (12) from the piston rod (14). Pay special attention to avoid damaging the piston or the sealing elements.
5. Remove and replace the lower gasket (13).

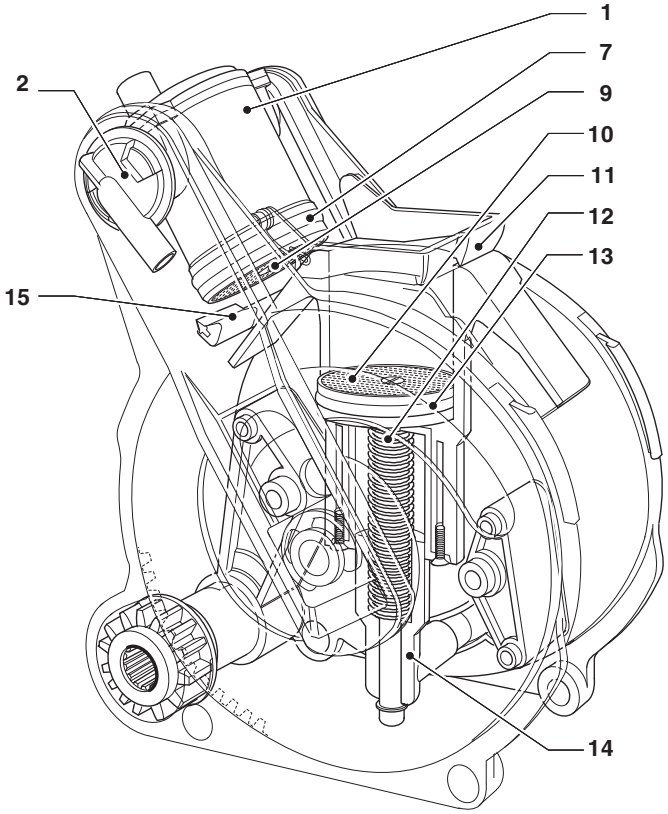

PERIODICAL OPERATION

This manual shows the potential critical points and gives the instructions necessary to control any bacterial proliferation.

On the basis of the health and safety rules in force, the operator of the vending machine shall apply the self-control procedures established according to the provisions of the HACCP (Hazard Analysis Critical Control Point) directive and the national laws.

Clean and disinfect the whole circuit and the parts in contact with the foodstuffs at least every year or more frequently, according to the utilisation of the machine or the inlet water quality.

SANITISING

- remove all the components in contact with the foodstuffs, including tubes, from the machine and disassemble them in all their parts;
- remove all visible residues and films mechanically by using pipe cleaners and brushes, if necessary;
- the components shall be immersed into a sanitising solution for at least 20 minutes;
- the internal surfaces of the equipment shall be cleaned by using the same sanitising solution;
- rinse abundantly and reassemble the various parts.

Before setting the machine at work once again, sanitise the machine after having assembled all the components, as it is described by chapter "Sanitising mixers and food circuits".

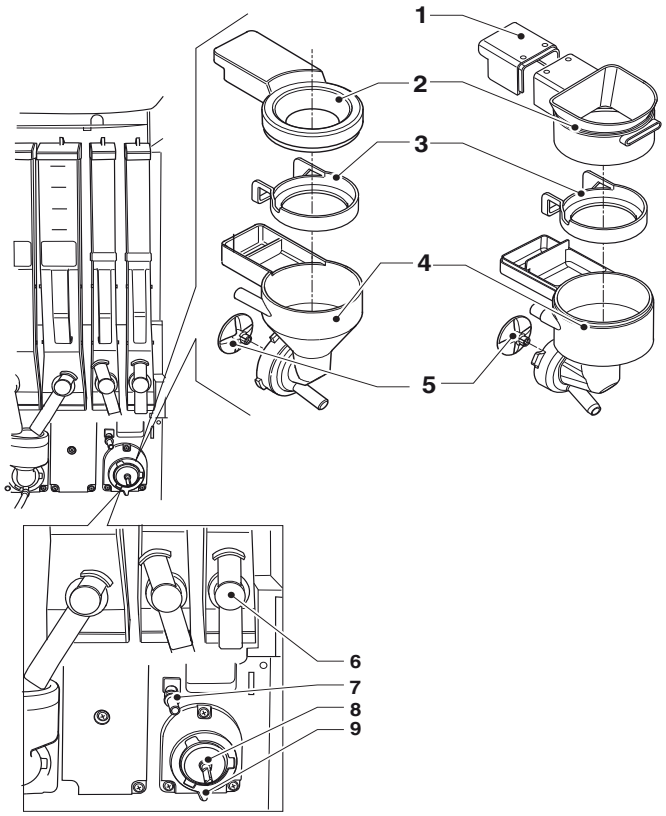

Fig. 42

1. *Rear cover*
2. *Powder funnel*
3. *Splash-guard ring*
4. *Water conveyor*
5. *Mixer impeller*
6. *Powder port*
7. *Water inlet nozzle*
8. *Stuffing gasket*
9. *Mixer fastening flange*

MIXER

For the machines dispensing instant drinks, disassemble the parts:

1. detach the tubes from the connections of mixers
2. turn the mixer fastening ring nut counter-clockwise and remove the mixer
   Pay special attention when re-closing it completely during re-assembly;
3. separate the instant powder funnel, the powder deposit drawer and the water funnel
4. disassemble the impellers: pull slightly to release them.

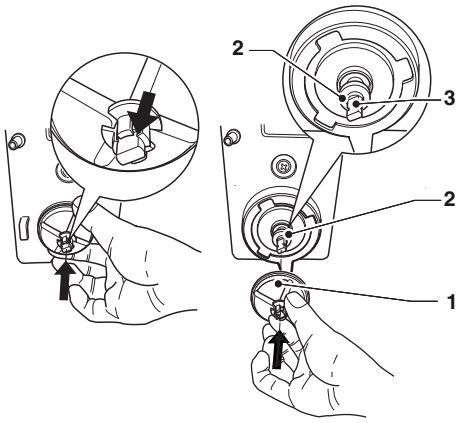

Fig. 43

1. Impeller
2. Stuffing gasket
3. Shaft undercut

5. dip the components into a canister with the sanitising solution you have prepared before for about 20';
   Wash all the components by using sanitising products (observe the dosage recommended by the producer). Make sure that all visible residues and films are mechanically removed. Use pipe cleaners and brushes, if necessary.
6. check the state of wear of the seal gasket on the whipper motor shaft.
   If it is worn, torn and no longer elastic, replace it.
7. reassemble the powder deposit drawers and the powder funnels after having carefully rinsed and dried them up;
8. re-position the mixer.
   Make sure that the water funnel is properly inserted.

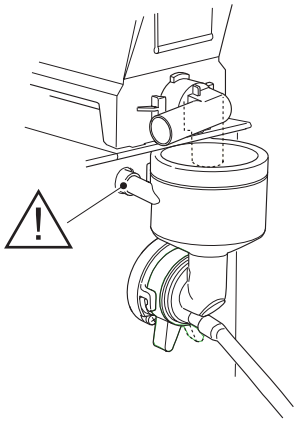

Fig. 44

9. rotate the ring nut intended to fasten the water funnel clockwise to secure the mixer to the machine

After having reassembled the parts, act as follows, any way:

Wash the mixers and add some drops of the sanitising solution into the various funnels. Then rinse abundantly to remove any residue of the solution in use.

CLEANING PRODUCT CANISTERS

Act as follows:

1. remove the canisters from the machine;
2. disassemble the product outlet ports and extract the scrolls from the rear side of the canister;
3. clean all the parts by using a solution of hot water and sanitising products. Dry the parts carefully.

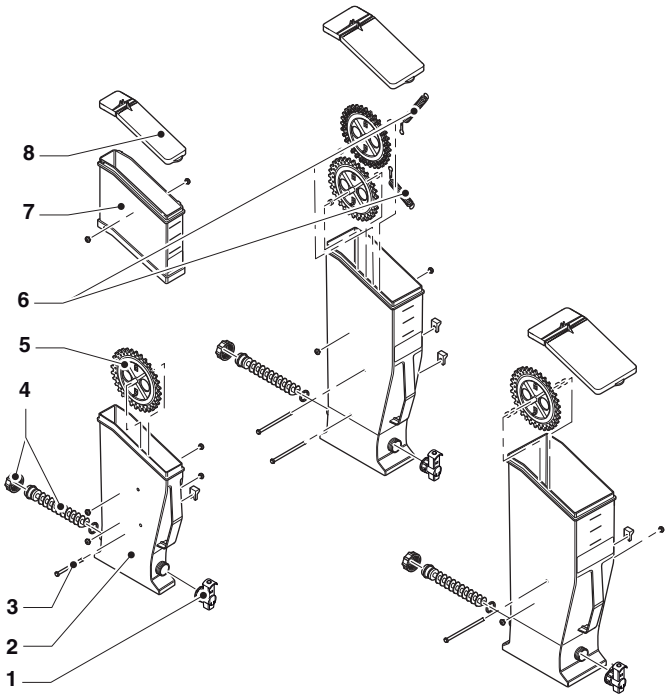

Fig. 45

1. Powder port
2. Instant powder canister
3. Pin for toothed wheel
4. Scroll
5. Toothed wheel
6. Scraper
7. Canister extension (some models)
8. Canister cover

STIRRER STACKER CONFIGURATION

The stirrer stacker can dispense one single type of stirrers, 90, 105 or 115 mm in length.

If the stirrers are of a different length, regulate the stacker guide.

Secure the guide to the stirrer stacker by using the holes corresponding to the length of the stirrers to be dispensed.

The stirrers must slide in the guide freely; use the stirrer weight of adequate length.

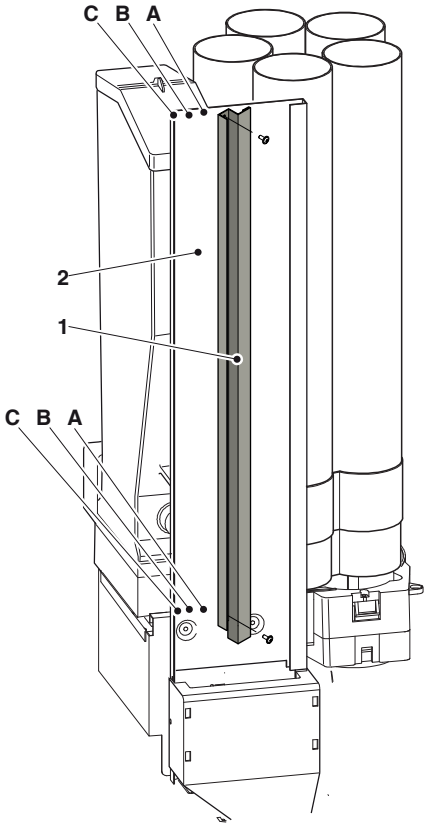

Fig. 46

1. Stirrer guide
2. Stirrer stacker
A. Fastening hole for the stirrer guide (90 mm)
B. Fastening hole for the stirrer guide (105 mm)
C. Fastening hole for the stirrer guide (115 mm)

ELECTRONIC BOARDS

The electronic boards are designed to be used on several equipment models.

If replaced, it is necessary to check the configuration of the electronic boards and to download the corresponding software.

POWER SUPPLY AND FUSES

The fuse intended to protect the power supply mains can be accessed without disassembling the cover.

The transformer supplying the boards and the relative protection fuses are arranged inside the electric panel.

Remove the covers after detaching the machine from the mains.

ELECTRIC PANEL

(single-boiler version)

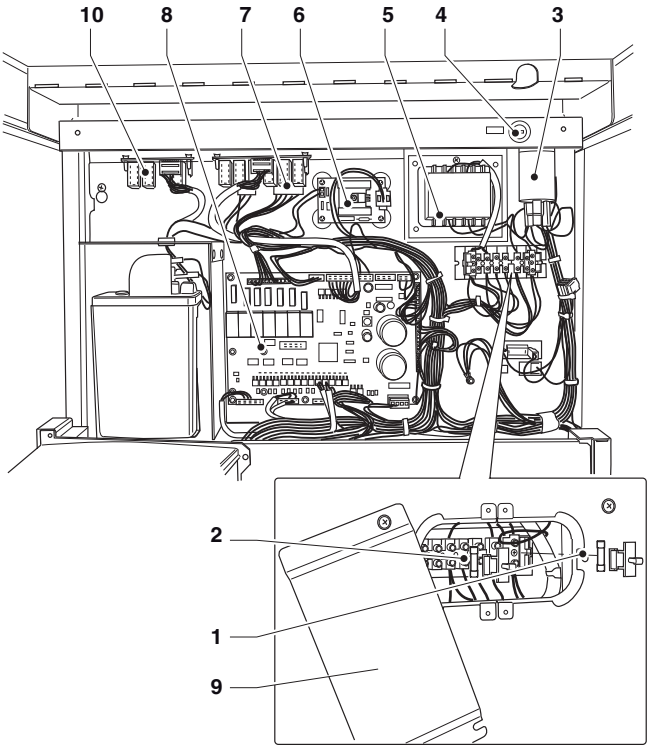

Fig. 47

1. *Primary transformer fuses*
2. *Secondary transformer fuses*
3. *Interference suppressor*
4. *Mains fuse*
5. *Transformer*
6. *Boiler control board*
7. *Relay board (if any)*
8. *Actuation board*
9. *Fuse access flap*
10. *Relay board (if any)*

ELECTRIC PANEL

(double-boiler version)

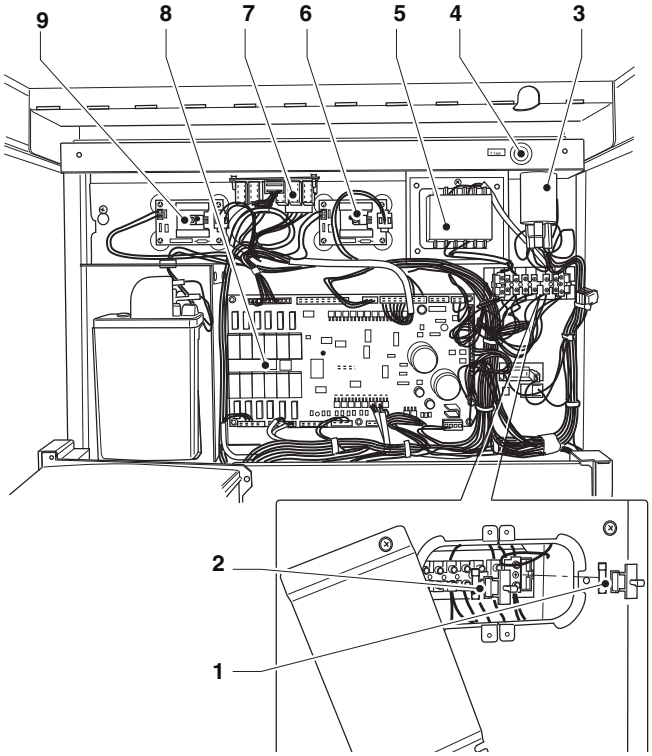

Fig. 48

1. *Primary transformer fuses*
2. *Secondary transformer fuses*
3. *Interference suppressor*
4. *Mains fuse*
5. *Transformer*
6. *Coffee boiler control board*
7. *Relay board (if any)*
8. *Actuation board*
9. *Instant boiler control board*

CPU BOARD

The CPU board manages the communication with the touch screen, with payment systems and connectivity functions.

ⓘ The Wi-Fi aerial is connected at the back of the CPU board.

⚠ The aerial and the relative connector are very delicate, pay attention not to damage them when you remove the CPU board (e.g. for replacement).

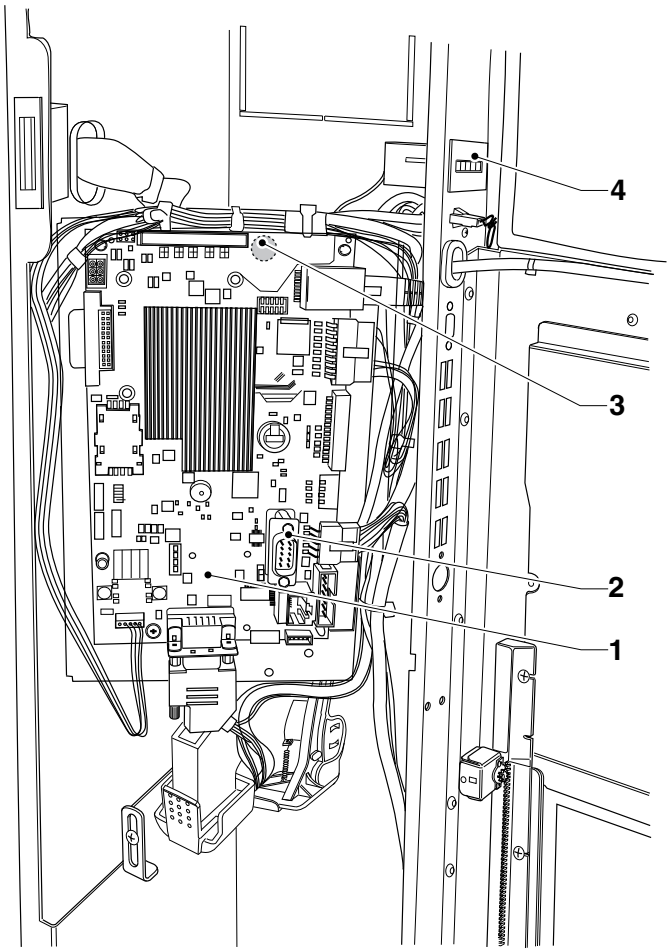

Fig. 49

1. C.P.U. board
2. RS232 serial port
*3. Wi-Fi aerial connector**
4. Mechanical counter (if any)
**. at the back of the board*

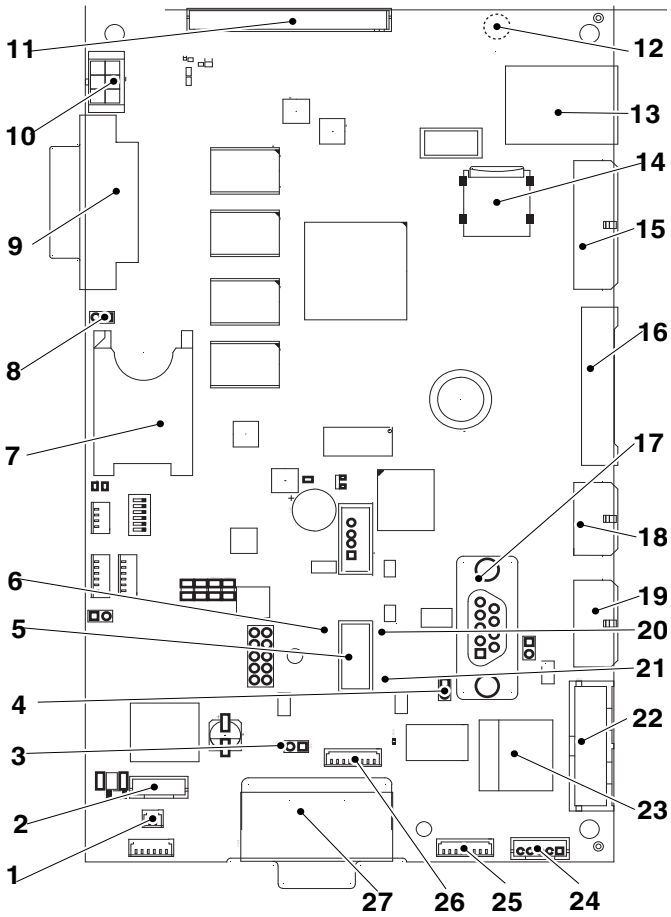

Fig. 50

1. (J2) connectivity switch
2. (CN30) not used
3. (JP2) CAN BUS jumper 1 closed
4. (JP5) CAN BUS jumper 2 open
5. USB OTG port
6. Yellow led RESET
*7. SIM card slot**
8. (JP4) SIM CARD jumper
9. (J16) DVI connector
10. (CN31) touch screen lighting
11. (CN55) Bus I2C
*12. (CN33) Wi-Fi aerial connector***
13. Ethernet connector (1 Gbit/s)
14. MICRO SD slot*
*15. (J42) service buttons and counter**
16. (J43) digital inputs / outputs
17. RS232 serial connector
18. (J41) not used
19. (J35) Payment systems
20. Red led POWER SUPPLY
21. Green led RUN
22. (J36) Validator
23. Ethernet connector (100 Mbit/s)
24. (CN9) touch screen connector
25. (J47) not used
26. (CN34) not used
27. (CN29) CAN BUS touch screen
**. If any*
***. At the back of the board*

ACTUATION BOARD

This board is intended to activate the users through relays and the direct current motors directly. Moreover, it can manage the signals from the cams and/or microswitches on the various users. Moreover, it controls the boiler management board. The board is supplied by 24 Vac for electronics and for payment systems.

The software intended to manage the board is directly loaded onto the microprocessor (by means of RS232).

- The green LED 6 (23) is flashing on and off during the normal operation of the board;
- The yellow LED 7 (25) is signalling that 5 Vdc is applied
- The red LED 8 (12) is on during the reset of the board
- The red LED 4 (17) is signalling the operation status of the espresso boiler heating element
- The red LED 5 (18) **not used** on these models is signalling the operation status of the instant boiler heating element.
- The green LED 1 (26) shows the volumetric counter pulses.
- The green LED 2 (1) is signalling that 34 Vdc is applied
- The green LED 3 (4) is signalling that 34 Vdc is regulated and applied

RELAY FUNCTION (SEE THE WIRING DIAGRAM)

RL1: EEA
RL2: MAC
RL3: MSB
RL4: MSCB
RL5: MD6
RL6: PM
RL7: ESC

SINGLE-BOILER MODELS

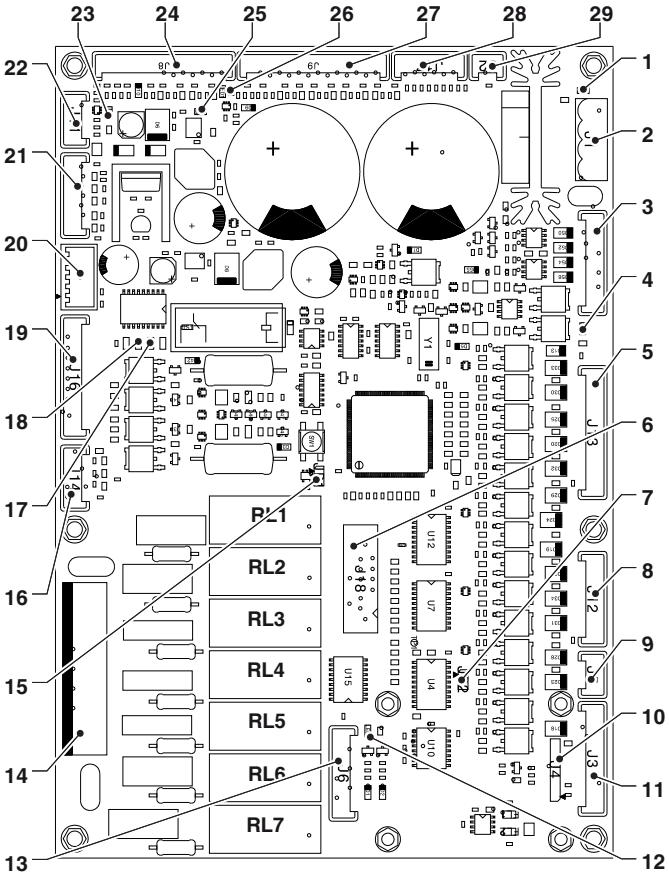

Fig. 51

1. *LED 2*
2. *(J1) 24 Vac power supply*
3. *(J15) Direct current actuators*
4. *LED 3*
5. *(J13) Solenoid valves - whipper motors (EV-MF)*
6. *Not mounted*
7. *JP2 CAN Jumper Closed*
8. *(J12) MD Ingredient motors*
9. *(J5) CAN BUS*
10. *(J4) Not used*
11. *(J3) To the CPU board*
12. *LED 8*
13. *(J6) Board programming*
14. *(J10) Actuators*
15. *JP1 closed*
16. *(J14) Z4000 motor*
17. *LED 4*
18. *LED 5*
19. *(J16) To the relay board (if any)*
20. *CPU power supply*
21. *(J7) Not used*
22. *(J11) Safety micro*
23. *LED 6*
24. *(J8) Input*
25. *LED 7*
26. *LED 1*
27. *(J9) Input*
28. *(J17) Boiler probe and actuation probe*
29. *(J2) Not used*

DOUBLE-BOILER MODELS

The board is intended to activate the 230 V∿ users through relays and the direct current motors directly. Moreover, it can manage the signals from the cams and/or microswitches on the various users.

The board is supplied at 24Vac.

- The green LED 3 (27) is flashing on and off during the normal operation of the board;
- The green LED 6 (33) is signalling that 5 Vdc is applied
- The red LED 4 (19) is on during the reset of the board
- The red LED 2 (8) is signalling the operation status of the instant boiler heating element
- The red LED 1 (9) is signalling the operation status of the coffee boiler heating element
- The green LED 8 (29) shows the volumetric counter pulses.
- The green LED 5 (5) is signalling that 34 Vdc is applied
- The green LED 7 (24) is signalling that 34 Vdc is regulated and applied

RELAY FUNCTION (SEE THE WIRING DIAGRAM)

RL1: PM
RL2: MAC2 (2 ES ONLY)
RL3: ESC2 (2 ES ONLY)
RL4: ESC
RL5: ER
RL6: MAC
RL7: EEA
RL8: Not used
RL9: MSB
RL10: MSCB

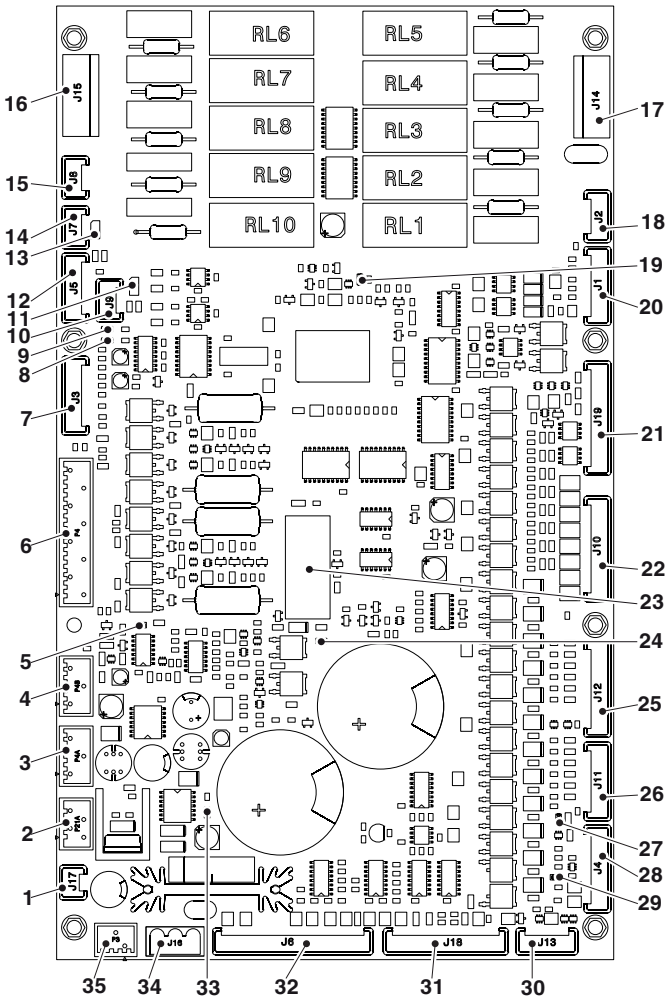

Fig. 52

1. *(J17) Steam suction*
2. *(P21A) Not used*
3. *(P4A) 34 Vdc power supply to the CPU*
4. *(P4B) 34 Vdc power supply to the CPU*
5. *Green LED “34Vdc presence”*
6. *(P4) Brew unit*
7. *(J3) To the relay expansion board (if any)*
8. *Red LED "coffee boiler heating element operation"*
9. *Red LED "instant boiler heating element operation"*
10. *(J9) Not used*
11. *Not used*
12. *(J5) Boiler and temperature probe control*

boards
13. (JP1) Can bus jumper (closed)
14. (J7) CAN-BUS
15. (J8) CAN-BUS
16. (J15) Users
17. (J14) Users
18. (J2) Not used
19. Red LED "board reset"
20. (J1) Not used
21. (J19) 24 V input and output
22. (J10) Ingredient motors
23. 34 Vdc safety relay
24. Green LED "regulated 24Vdc presence"
25. (J12) Whipper motors
26. (J11) Solenoid valves
27. Green LED “operating board”
28. (J4) Board programming connector
29. Green LED “volumetric counter pulses”
30. (J13) Not used
31. (J18) Input
32. (J6) Input signals
33. Green LED “5Vdc presence”
34. (J16) 24 Vac power supply
35. (P3) Not used

BOILER CONTROL BOARD

The board is intended to control the trip of the boiler heating element.

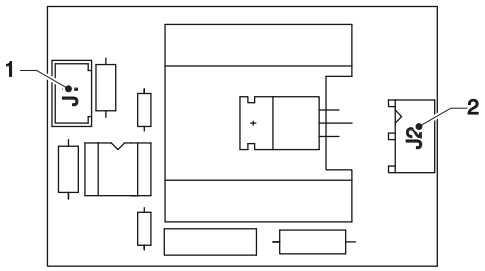

Fig. 53

1. J1 To the actuation board
2. J2 To the boiler heating element

CURRENT REGULATOR BOARD

The current regulator board will supply lighting LEDs by means of direct current.

The board will provide for the constant brightness of aesthetic panels.

The board is arranged on the CPU board support.

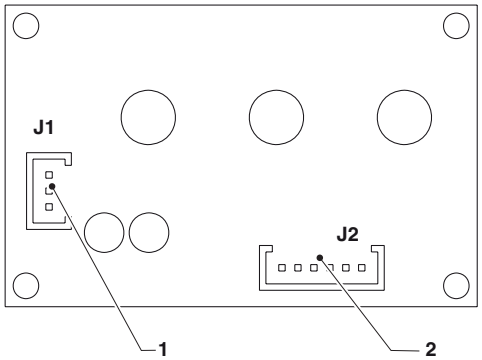

Fig. 54

1. To the CPU board
2. To the lighting LED's

SWITCH BOARD

The switch board is intended to enable the regulation motors of grinding wheels in 2 espresso models.

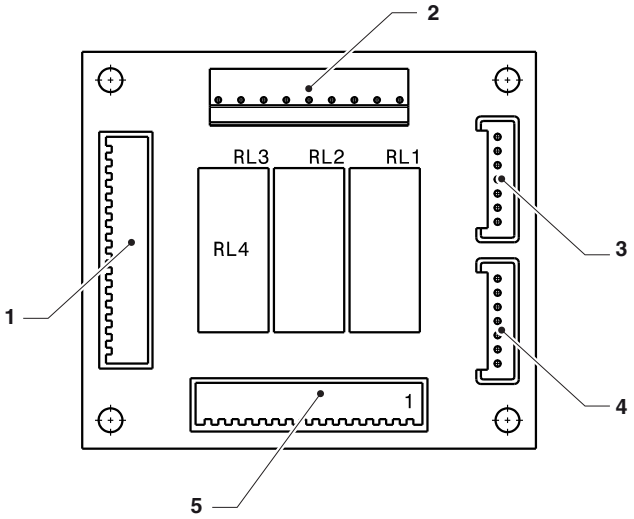

Fig. 55

1. (P1) relay supply
2. (P3) regulation motor of grinding wheels 2
3. (J2) to connector J1 of SM2 (relay command)
4. (J1) to connector J16 of SM1 (relay command)
5. (P2) regulation of motor of grinding wheels 1

RELAY FUNCTION (Wiring diagram reference)
RL1 = to switch MMA1 <-->MMA2
RL2 = to switch MMA1 <-->MMA2
RL3 = not mounted
RL4 = not used

RELAY BOARD

The board is intended to manage the second grinder and the second coffee release electromagnet for single-boiler 2ES models; and the cooling unit (models for dispensing cold drinks only.

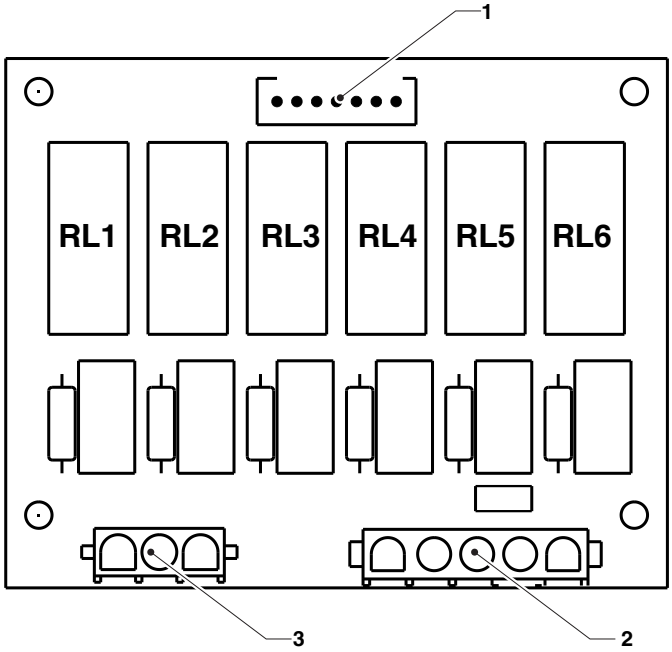

Fig. 56

(Wiring diagram reference)
1. (J1) to the machine board or J2 of SM3 (if any)
2. (J2) to the cooling unit board
3. (J3) MAC2 and ESC2

RELAY FUNCTION (Wiring diagram reference)
RL1 = MAC2
RL2 = ESC2
RL3 = UPS (if any)
RL4 = UPS (if any)
RL5 = UPS (if any)
RL6 = UPS (if any)

TOUCH SCREEN SUPPLY UNIT

The touch screen power supply unit is assembled top on the left and inside the door.

No maintenance and/or calibration is required by the power supply unit.

To act on the supply unit (e.g. for replacement):

1. Detach the equipment from the mains supply
   Attention !!!
   The supply unit is connected at the mains voltage
2. remove the protection cover

Fig. 57

1. Touch screen supply unit

FAN REPLACEMENT

The steam suction fan is accessed from the inside of the machine.

If it should be necessary to act on the fan for any reason, remove the instant canisters from the machine and the cover.

Important!!!

Remove the covers after detaching the device from the mains.

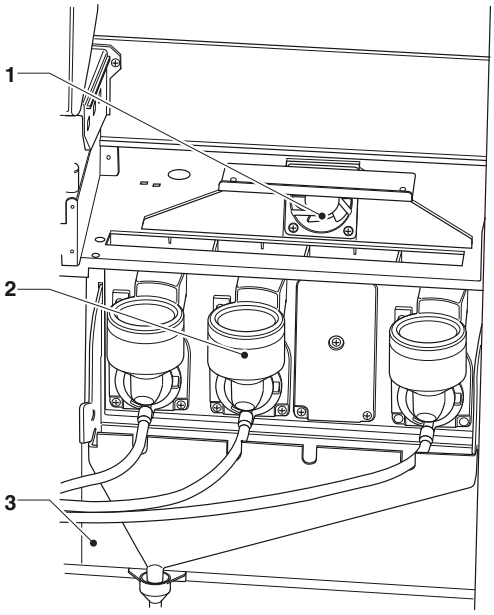

Fig. 58

1. *Steam suction fan*
2. *Instant mixer*
3. *Instant mixer cover*

BOILER HEAT PROTECTION

The boiler/s is/are protected against overheating by a safety thermostat disabling the boiler heating element in case of a failure in the boiler control system.

The thermostat trips if the internal water temperature should exceed the safety threshold.

If the thermostat trips, wait for the boiler to cool down before finding out the reason for the failure and manually resetting the thermostat.

Important!!!

If the safety thermostat should trip, replace the boiler temperature probe and the gaskets of the unions on the boiler since they may be irreversibly damaged.

COFFEE BOILER

A safety thermostat is arranged on the coffee boiler to stop the power supply of the heating element if the boiler should reach and exceed the temperature of 125°C.

To reset the thermostat:

1. Open the espresso shelf
2. Press the button to reset the thermostat
3. Re-close the espresso shelf

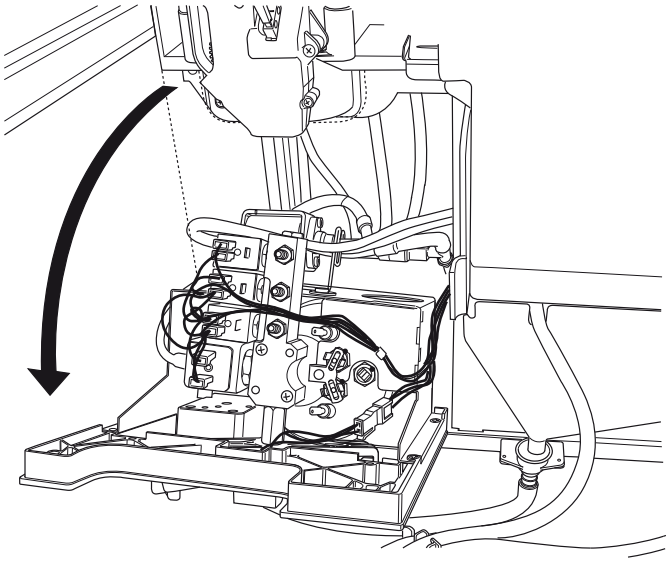

Fig. 59

INSTANT BOILER

For double-boiler models only.

The instant boiler has a safety thermostat intended to stop the power supply of the heating element if the boiler should reach the temperature of 140°C

To reset the thermostat:

1. Open the instant shelf
2. Unscrew the cover of the reset button
3. Press the button to reset the thermostat
4. Screw the cover of the reset button
5. Re-close the instant shelf

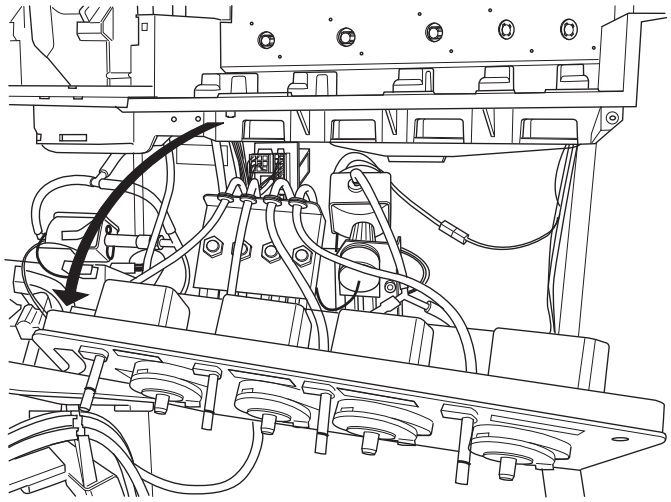

Fig. 60

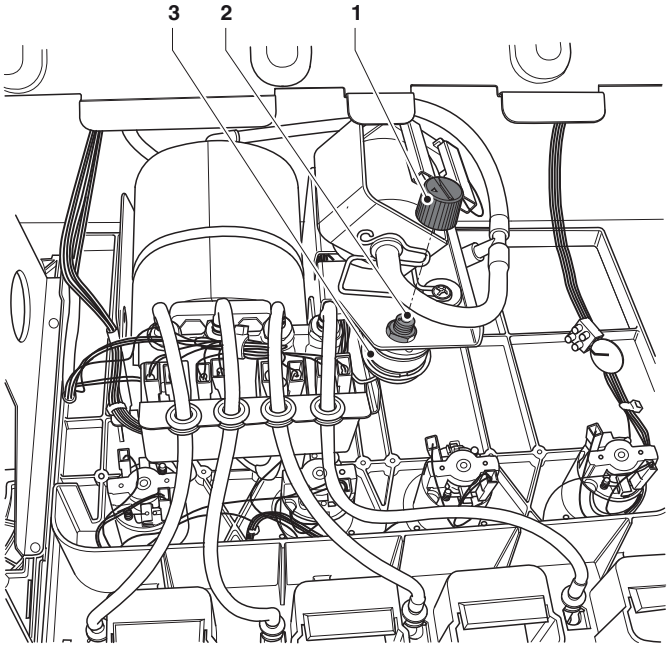

Fig. 61

1. Reset button cover
2. Thermostat reset button
3. Capillary thermostat

SOFTWARE INSTALLATION AND/ OR UPDATE

ⓘ The installation and/or update of the operating system deletes the application software, statistical data as well as the settings and customisations made. Videos/images for playlists are deleted.

Use the backup functions on a USB stick (import / export menu) to save the settings, the customisations and the videos/images for playlists.

The software must be installed and/or updated by means of a USB stick (as soon as the equipment is started).

ⓘ The USB stick must be formatted by means of file system FAT32 so as to include only the files necessary for the update.

Compatibility is not guaranteed for all USB memory devices on the market.

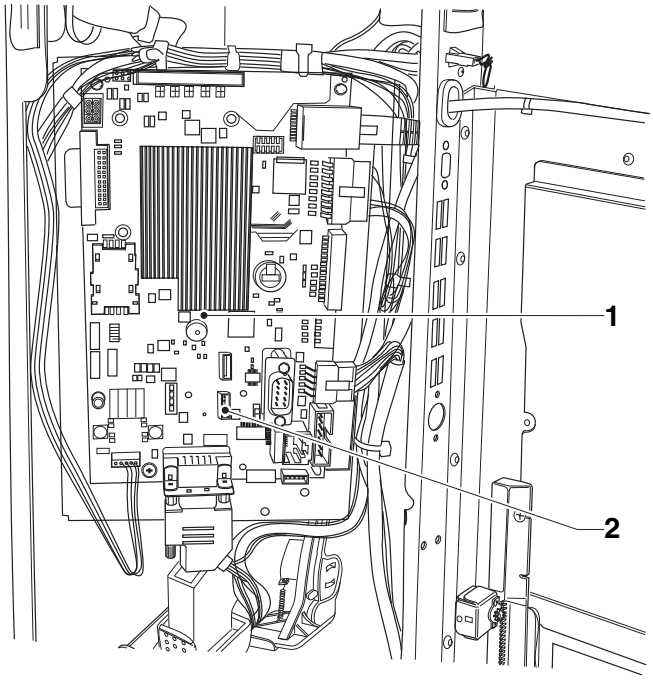

Fig. 62

1. C.P.U. board
2. USB OTG port

"SYSTEM KEY" OPERATING SYSTEM KEY 1

Act as follows:

1. copy every single file of the operating system in the main directory of the USB stick,
2. power off the equipment
3. insert the USB stick in the USB OTG port of the CPU board
4. power on the equipment
5. some messages appear to show the progress of the update.
   The update requires some minutes.
6. at the end of the update, a message appears requiring the user to remove the USB stick.
7. after removing the USB stick, the equipment is automatically restarted.
8. Install the application software

"UPDATE STICK" APPLICATION KEY 2

Act as follows:

1. copy every single file of the application in the main directory of the USB stick,
2. power off the equipment
3. insert the USB stick in the USB OTG port of the CPU board
4. power on the equipment
5. some messages appear to show the progress of the update.
   The update requires some minutes.
6. at the end of the update, a message appears requiring the user to remove the USB stick.
7. after removing the USB stick, the equipment is automatically restarted.
8. the guided procedure will be started for the first settings (equipment model, language of messages, name of the machine, …)

ⓘ The update of the application software keeps the settings, the customisations as well as videos/images for the playlists.

Appendix

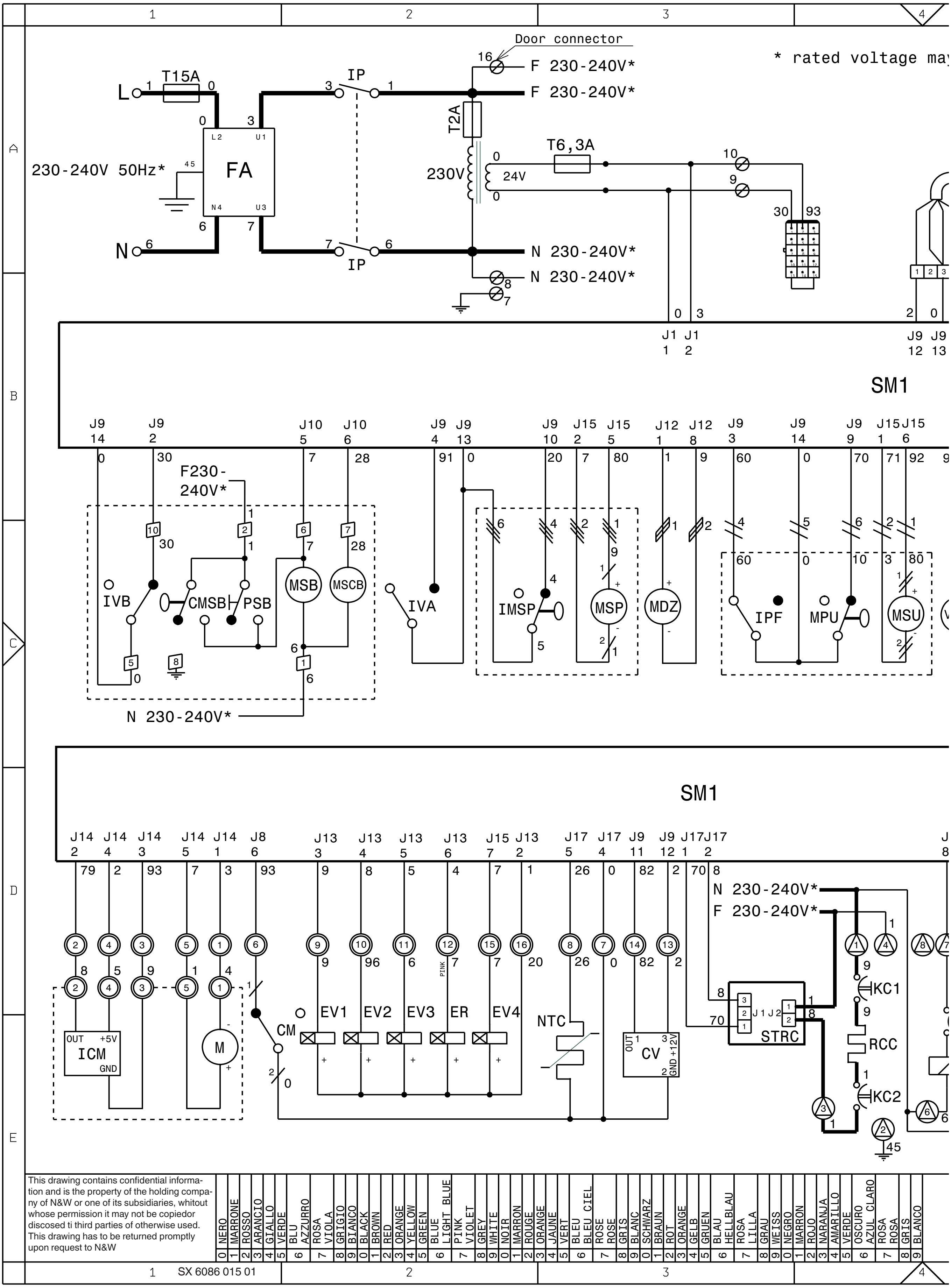

230 V	TRANSFORMER	IMSP	STIRRER RELEASE MICRO-SWITCH
CM	MOTOR CAM	IP	DOOR SWITCH
CMSB	CUP RELEASE MOTOR CAM	IPF	FULL WASTE SWITCH
CV	VOLUMETRIC COUNTER	IVA	EMPTY WATER SWITCH
DOOR	DOOR CONNECTOR	IVB	EMPTY CUP SWITCH
EEA	WATER INLET SOLENOID VALVE	KC1-..	COFFEE BOILER CUTOUT
ER	COFFEE DISPENSING SOLENOID VALVE	KS1-..	SAFETY CUTOUT
ESC1-.	COFFEE RELEASE ELECTROMAGNET	LF	LAMP
EV1-..	INSTANT SOLENOID VALVES	M	COFFEE UNIT MOTOR
FA	RADIO INTERFERENCE SUPPRESSOR	MAC1-.	COFFEE GRINDER
ICM	MOTOR CONTROL SWITCH	MD1-..	INGREDIENT MOTORS
ID1-..	COFFEE DOSE SWITCH	MDTE-.	FRESH TEA INGREDIENT MOTOR

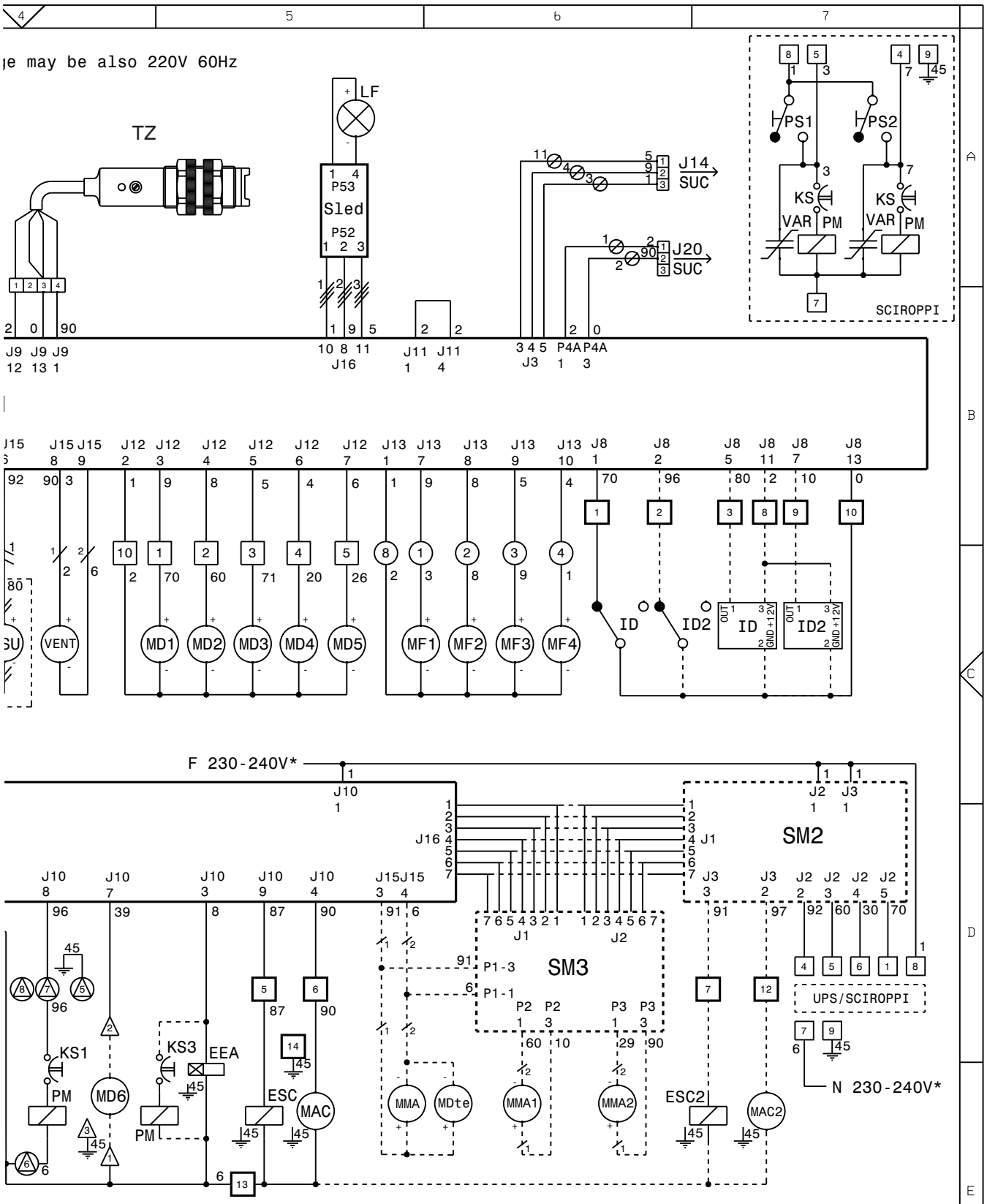

MODEL	DEFINITION	DATE	SHEET	PREPARED	CHECKED
Concerto Opera	SCHEMA ELETTRICO - WIRING DIAGRAM Macchina - Machine	14/01/2010	1/1	BONACINA	CAPOBIANCO
		LEGENDA -	PART NUMBER 608601501		VERSION B

MDZ	SUGAR INGREDIENT MOTOR
MF1-..	WHIPPER MOTORS
MMA1-.	GRINDER ADJUSTING MOTOR
MPU	SPOUT POSITIONING MICROSWITCH
MSB	CUP RELEASE MOTOR
MSCB	CUP COLUMN SHIFT MOTOR
MSP	STIRRER RELEASE MOTOR
MSU	NOZZLE SHIFT MOTOR
NTC	TEMPERATURE PROBE
PM	PUMP
PS1-..	SYRUP BUTTON
PSB	CUP RELEASE BUTTON
RCC	COFFEE BOILER HEATING ELEMENT
SLED	LED BOARD
SM1	CONTROL BOARD
SM2	EXPANSION BOARD
STRC	BOILER HEATING TRIAC BOARD
TX....	DELAYED FUSE (X=CURRENT)
TZ	CUP SENSOR
UPS	COLD UNIT BOARD
VAR	VARISTOR
VENT	FAN

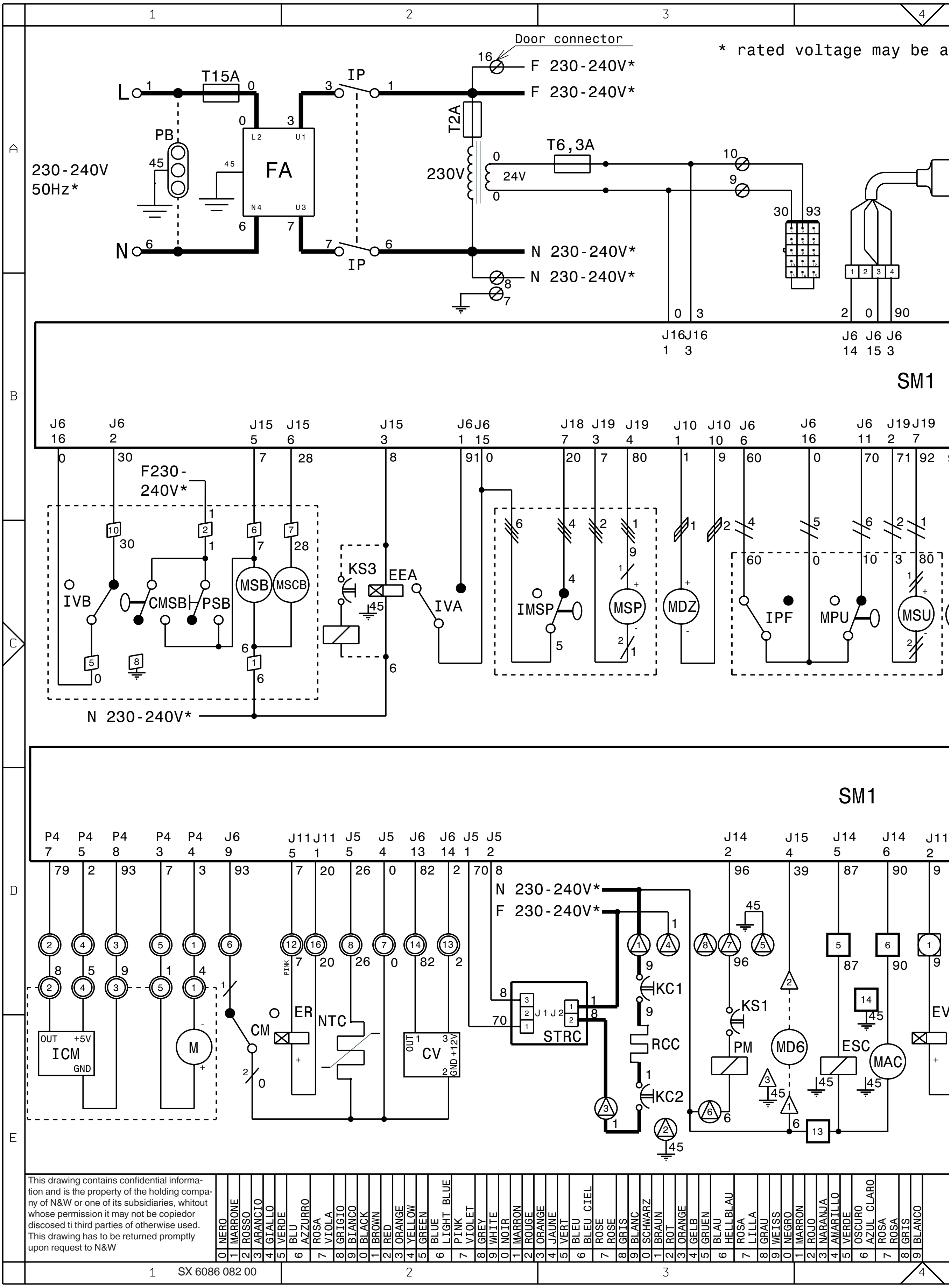

This drawing contains confidential information and is the property of the holding company of N&W or one of its subsidiaries, whitout whose permission it may not be copiedor discosed ti third parties of otherwise used. This drawing has to be returned promptly upon request to N&W

CMSB1-	CUP RELEASE MOTOR CAM
CV	VOLUMETRIC COUNTER
EEA	WATER INLET SOLENOID VALVE
ER	COFFEE DISPENSING SOLENOID VALVE
ESC	COFFEE RELEASE ELECTROMAGNET
EV1-..	INSTANT SOLENOID VALVES
FA	RADIO INTERFERENCE SUPPRESSOR
ICM	MOTOR CONTROL SWITCH
ID1-..	COFFEE DOSE SWITCH
IMSP	STIRRER RELEASE MICRO-SWITCH
IP	DOOR SWITCH
IPF	FULL WASTE SWITCH
IVA	EMPTY WATER SWITCH
IVB1-.	EMPTY CUP SWITCH
KC1-..	COFFEE BOILER CUTOUT
KS1-..	SAFETY CUTOUT
LF	LAMP
M	COFFEE UNIT MOTOR
MAC1-.	COFFEE GRINDER
MD1-..	INGREDIENT MOTORS
MDZ	SUGAR INGREDIENT MOTOR
MF1-..	INSTANT WHIPPER MOTORS
MMA1-.	GRINDING REGULATION MOTOR
MPU	SPOUT POSITIONING MICROSWITCH

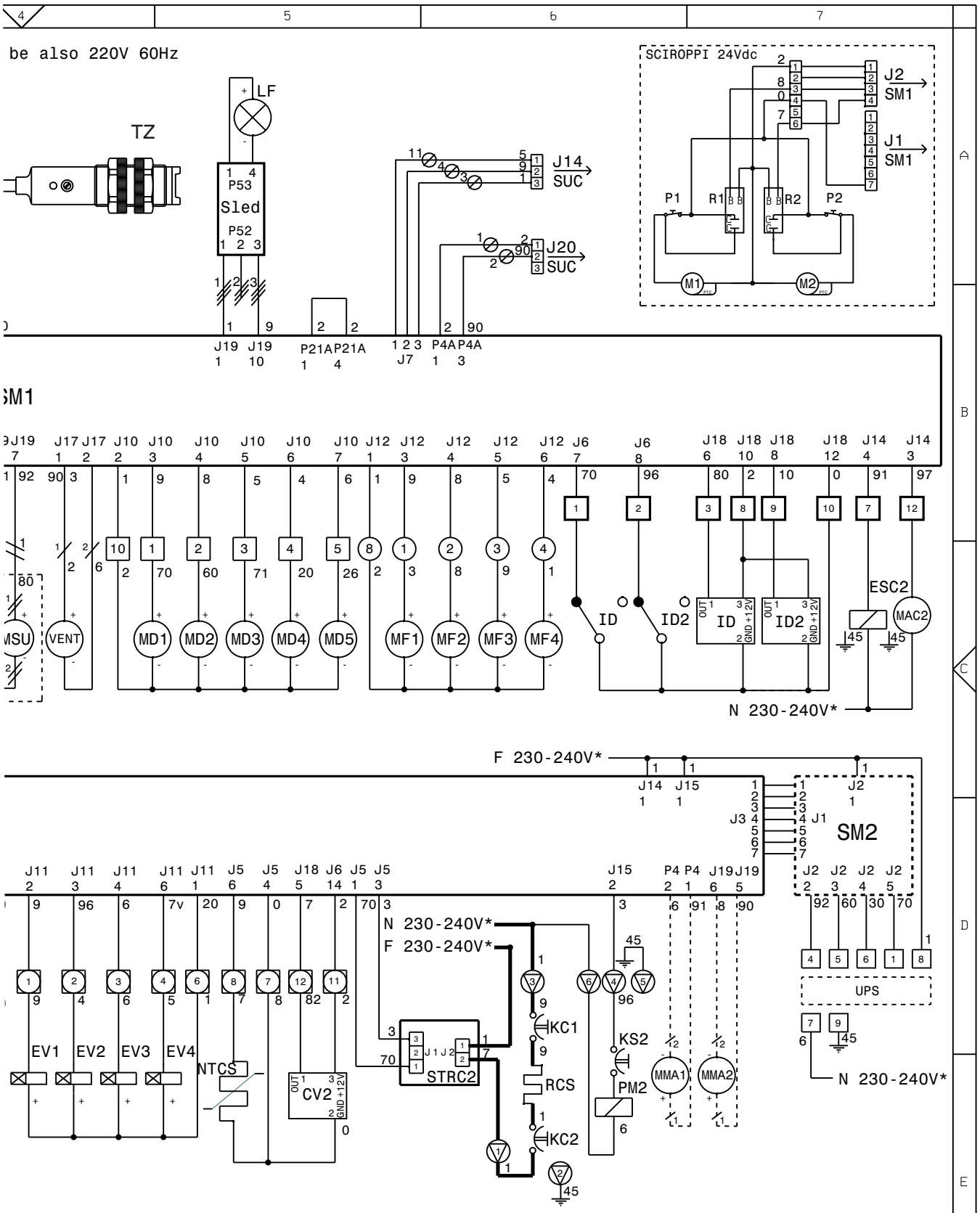

MODEL	DEFINITION	DATE	SHEET	PREPARED	CHECKED
Opera Concerto Plus	SCHEMA ELETTRICO - WIRING DIAGRAM Macchina - Machine	03/04/2015	1/1	BONACINA	BORLOTTI
		LEGENDA -	PART NUMBER 608608200		VERSION B

MSB1-.	CUP RELEASE MOTOR
MSCB	CUP COLUMN SHIFT MOTOR
MSP	STIRRER RELEASE MOTOR
MSU	NOZZLE SHIFT MOTOR
NTC	TEMPERATURE PROBE
NTCS	INSTANT BOILER TEMPERATURE PRO
PM	PUMP
PM1-..	WATER PUMP
PS1-..	SYRUP BUTTON
PSB	CUP RELEASE BUTTON
RCC	COFFEE BOILER HEATING ELEMENT
RCS	INSTANT BOILER HEATING ELEMENT

SLED	LED BOARD
SM1	CONTROL BOARD
SM2	EXPANSION BOARD
STRC1	BOILER HEATING TRIAC BOARD
STRC2	BOILER HEATING TRIAC BOARD
TX....	DELAYED FUSE (X=CURRENT)
TZ	CUP SENSOR
UPS	COLD UNIT BOARD
VAR	VARISTOR
VENT	FAN

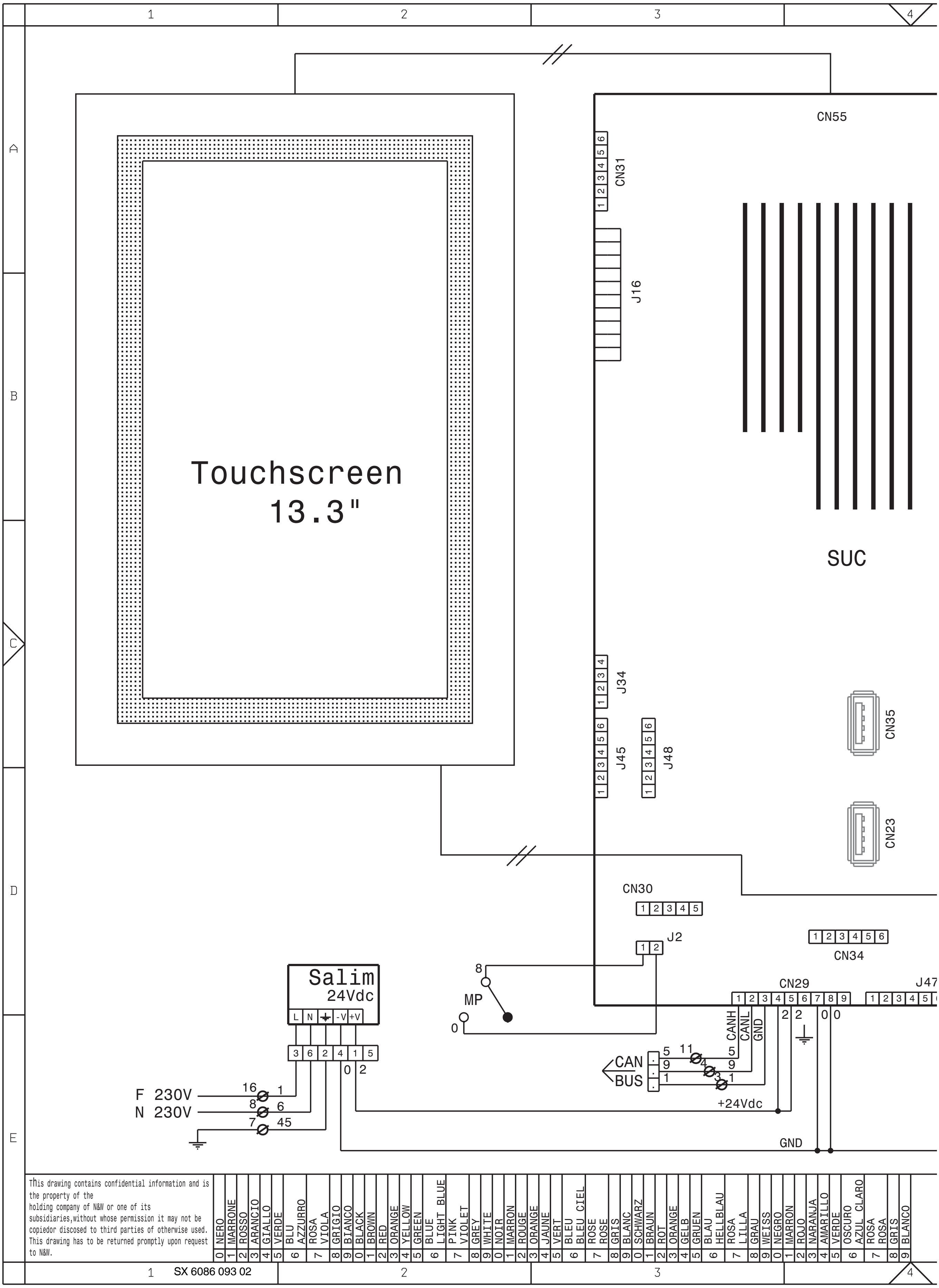

BDV	BDV COIN MECH CONNECTOR	PIP	PROGRAMMING BUTTON
CCG	GENERAL COUNTER	PL	WASHING BUTTON
DOOR	DOOR CONNECTOR	PPO	“PRIMING” BUTTON
EX	EXECUTIVE COIN MECH CONNECTORS	PST	STATISTICS BUTTON
FREE	FREE VEND SWITCH	PTB	CUPS SHIFTER BUTTON
JUG	JUG FACILITIES SWITCH	SALIM	POWER SUPPLY UNIT BOARD
MDB	MDB COIN MECH CONNECTOR	SLED	LED BOARD
MP	OPEN DOOR SIGNALLING MICRO	SUC	C.P.U. BOARD

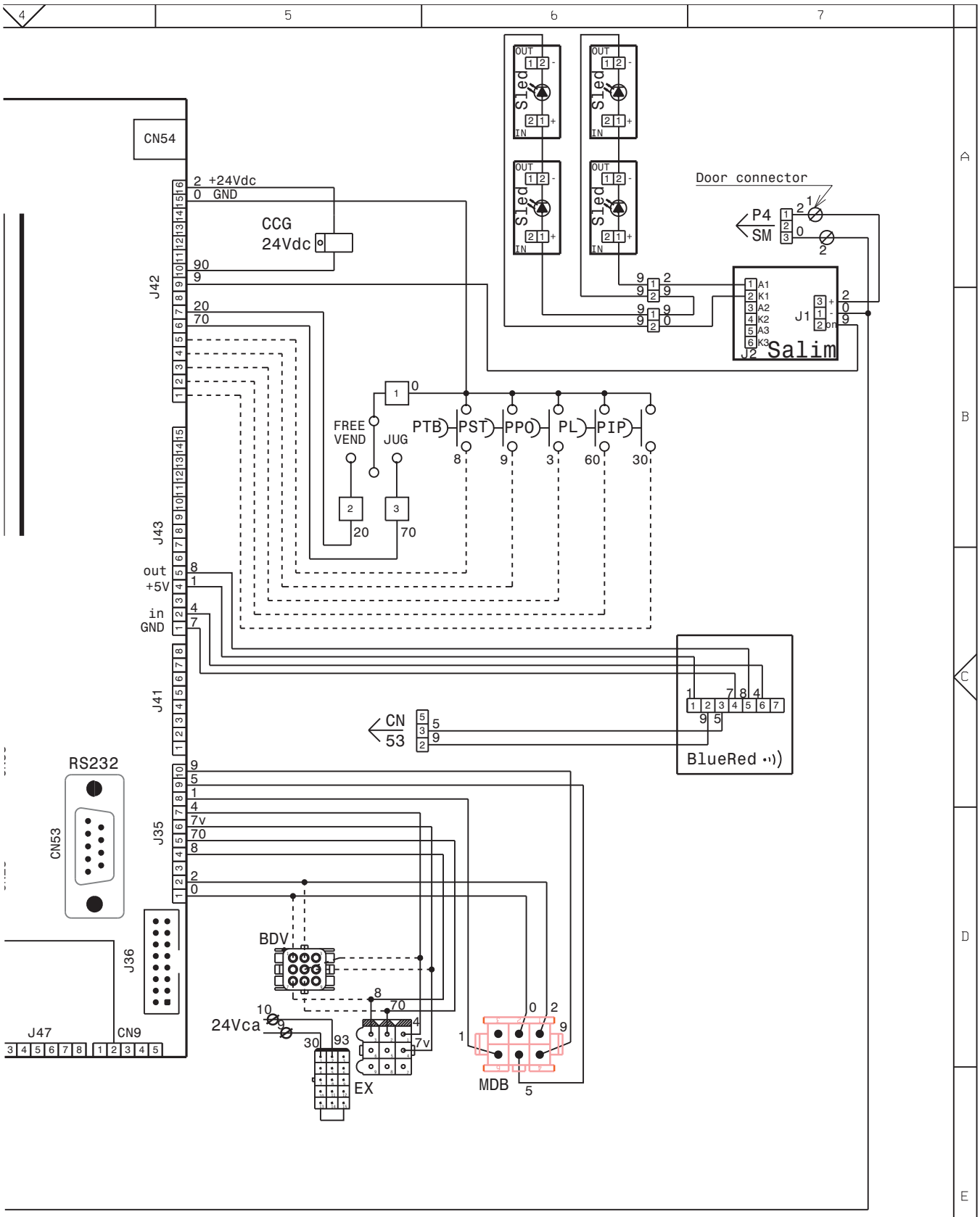

MODEL	DEFINITION	DATE	SHEET	PREPARED	CHECKED
Opera Concerto	SCHEMA ELETTRICO PORTA DOOR WIRING DIAGRAM		1/1	BONACINA	ZANCANER
		LEGENDA -	PART NUMBER 608609302		VERSION A

BLANCO

HYDRAULIC CIRCUIT

SINGLE-BOILER VERSION

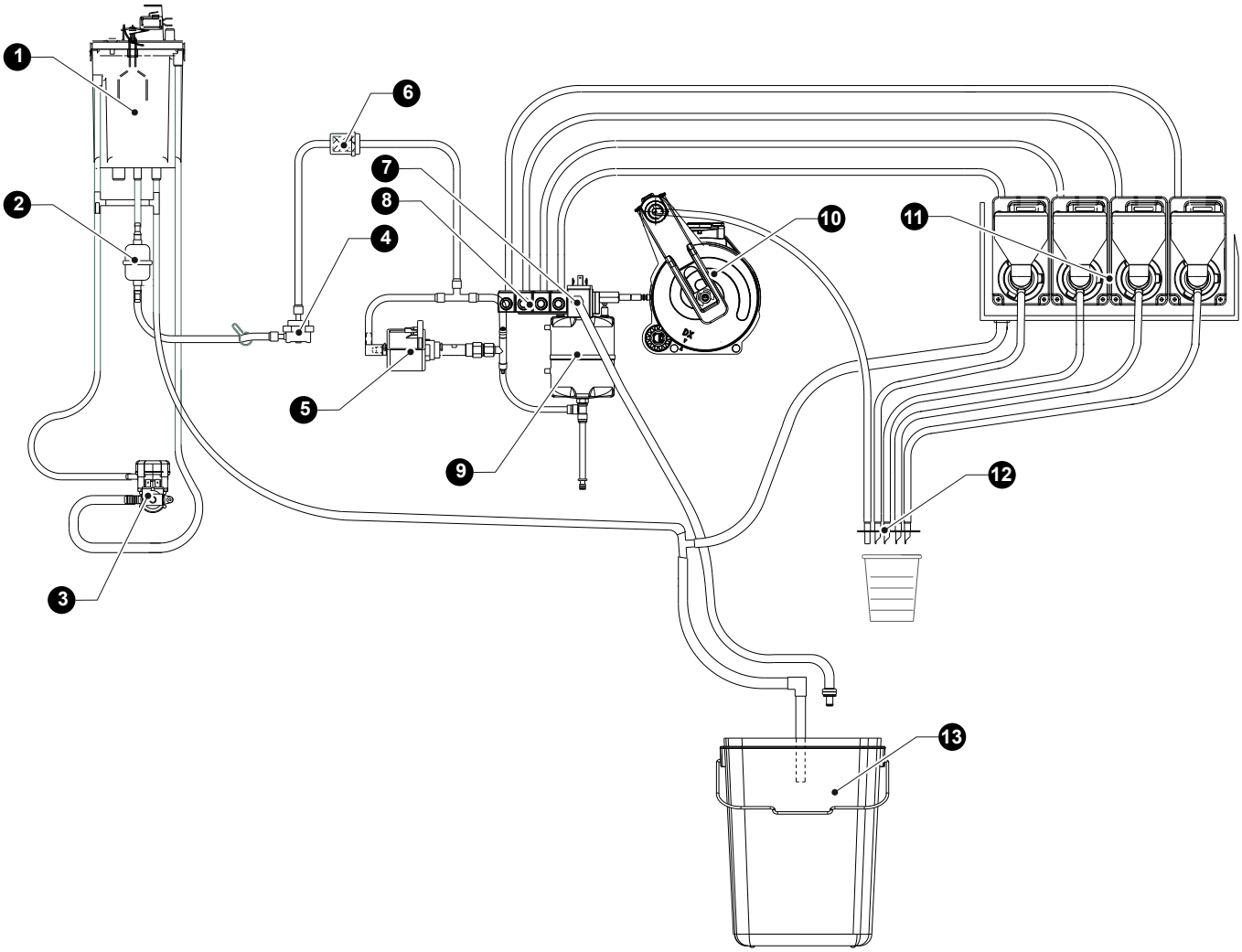

Fig. 1

1. *air-break*
2. *mechanical filter*
3. *water inlet solenoid valve*
4. *volumetric counter*
5. *pump*
6. *dampening filter (models with automatic grinding regulation only)*
7. *espresso solenoid valve*
8. *instant solenoid valves*
9. *boiler*
10. *brew unit*
11. *mixer*
12. *nozzles*
13. *liquid waste bucket*

HYDRAULIC CIRCUIT

DOUBLE-BOILER VERSION

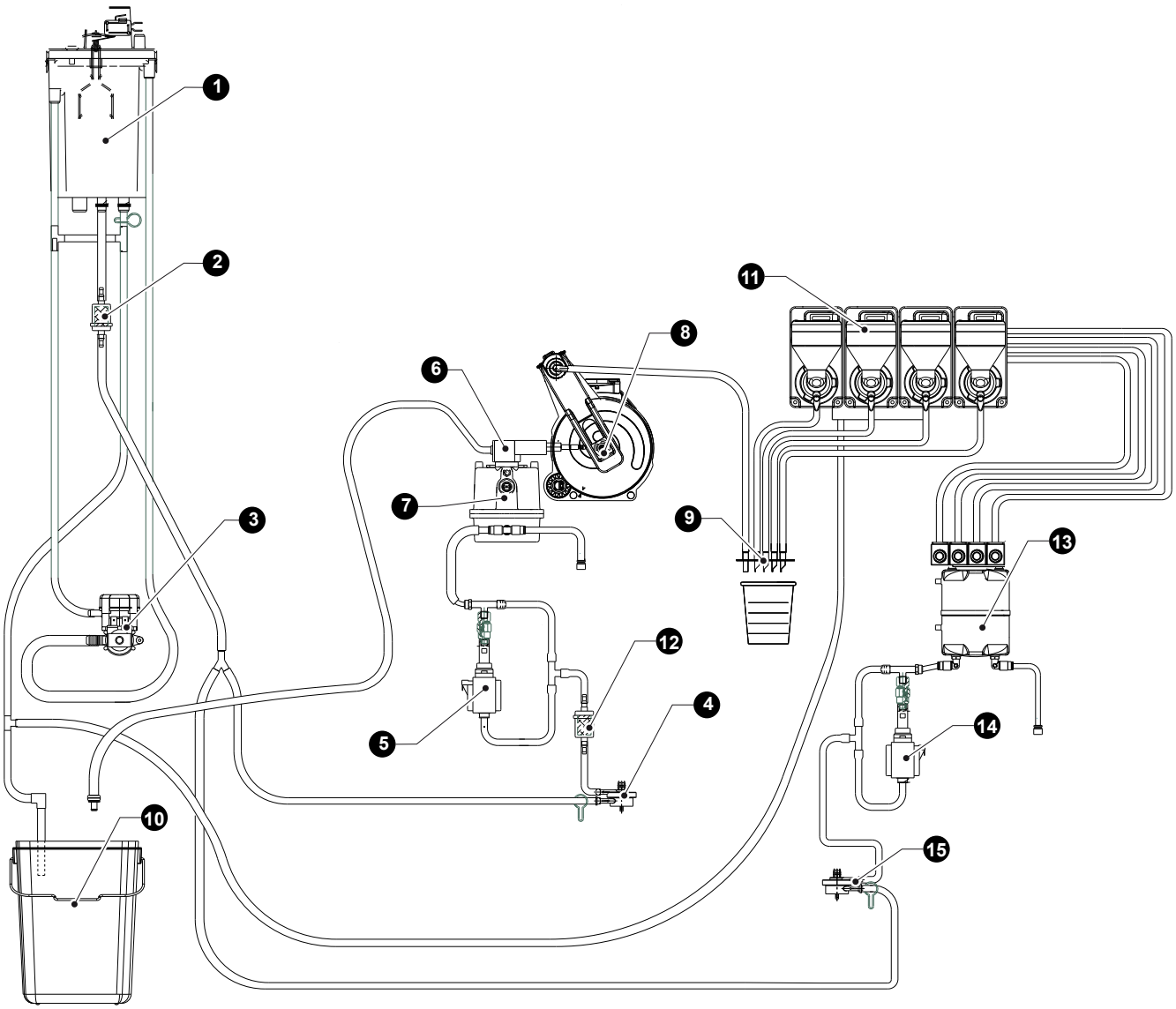

Fig. 2

1. *air-break*
2. *mechanical filter*
3. *water inlet solenoid valve*
4. *espresso volumetric counter*
5. *pump*
6. *espresso solenoid valve*
7. *espresso boiler*
8. *brew unit*
9. *nozzles*
10. *liquid waste bucket*
11. *mixer*
12. *dampening filter (models with automatic grinding regulation)*
13. *instant boiler*
14. *pump*
15. *instant volumetric counter*

The Manufacturer reserves the right to modify the features of the equipment described in this publication without giving any prior notice. Moreover, it disclaims all responsibility for any inaccuracy contained in this publication that can be ascribed to printing and/or transcription errors.
All instructions, drawings, tables and information in general contained in this publication are confidential and can be neither entirely nor partially reproduced or transmitted to third parties without the written consent of the Manufacturer who has the sole ownership.

EDITION 1 04 - 2017 CODE H5205EN00